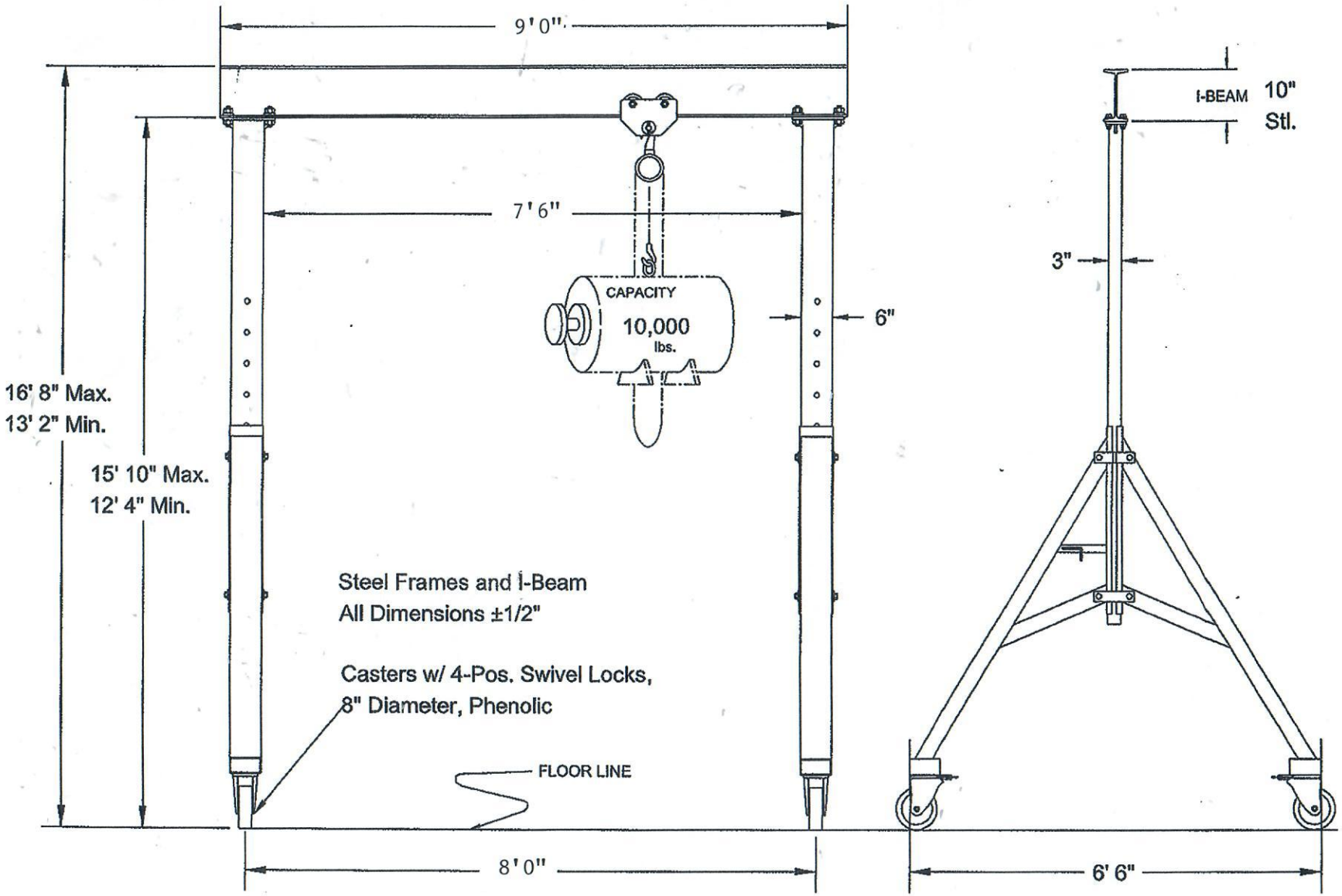

Model 1015-9AC

© Copyright Wallace Cranes 2025. All rights reserved.

UNLESS OTHERWISE SPECIFIED DIMENSIONS ARE IN INCHES TOLERANCES ON FRACTION ±1/2" DECIMAL ±0.5"		Wallace Cranes MALVERN, PENNSYLVANIA	
DRAWN BY JIF	DATE 10-15-14	TITLE THRIFTY GANTRY	ADJUSTABLE
CHECKED		SCALE NTS	WT.
APPROVAL		SIZE C	DRAWING No.
			REV.

STAT.	DESCRIPTION	DATE	INIT.
	CONVERTED TO CAD DRAWING		

REVISIONS