CDB – 321 – 055 – 097

PHASE 2 – TUNNEL & STEAM PIPING RENOVATIONS

ELGIN MENTAL HEALTH CENTER

ELGIN, KANE COUNTY, ILLINOIS

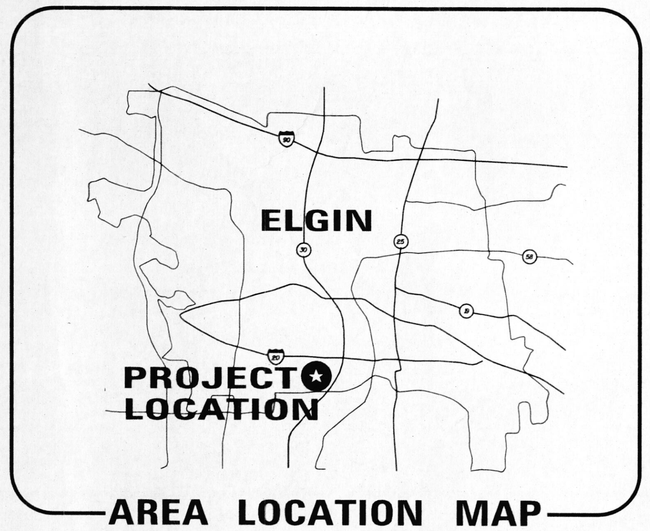

AREA LOCATION MAP

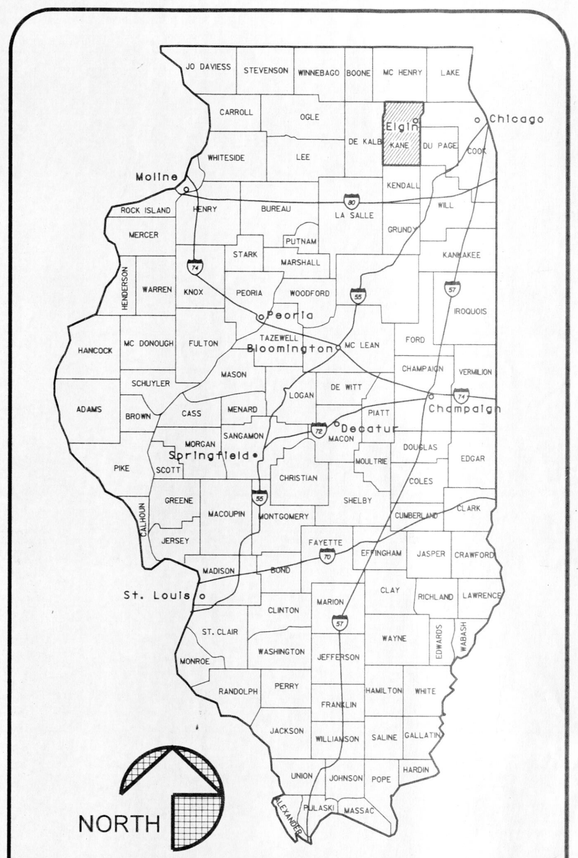

STATE LOCATION MAP

FOR:

STATE OF ILLINOIS
CAPITAL DEVELOPMENT BOARD

USING AGENCY:

ILLINOIS DEPARTMENT OF HUMAN SERVICES

AS BUILT

DATE: FEBRUARY 3, 2003

REVISIONS			DRAWN	PREPARED	SEAL
NO.	DATE	REMARKS	GGL	APM	
			TRACED	APPROVED	
			CHECKED	APPROVED	
			APM	FRD	

STV Incorporated
engineers/architects/planners/scientists/construction managers
70 W. MADISON ST. SUITE 2840 CHICAGO, IL 60602

CAPITAL DEVELOPMENT BOARD

State of Illinois
George H. Ryan, Governor

TITLE SHEET AND LOCATION PLANS

ELGIN MENTAL HEALTH CENTER
750 SOUTH STATE STREET
ELGIN, ILLINOIS 60123

CDB PROJECT NO: 321-055-097 PH-2
DATE: FEBRUARY 3, 2003
SHEET NO: G-1
OF SHEETS

J:*USTN*1642*MECH*G02.DGN

INDEX OF DRAWINGS

MECHANICAL

DRAWING NUMBER	TITLE
G - 1	TITLE SHEET AND LOCATION PLANS
G - 2	INDEX OF DRAWINGS
G - 3	PARTIAL SITE PLAN - SOUTH SECTION
G - 4	PARTIAL SITE PLAN - NORTH SECTION
M - 1	PARTIAL SITE PLAN - SOUTH SECTION
M - 2	PARTIAL SITE PLAN - SOUTH SECTION
(NIC) M - 3	PARTIAL SITE PLAN - SOUTH SECTION
M - 4	NOT USED
M - 5	NEW PIPING ARRANGEMENT, UNDERGROUND PIPING CONDUIT SYSTEM, AND PARTIAL TUNNEL T26-1
M - 6	SUMP PUMP/PIT ENLARGEMENT PLANS
(NIC) M - 7	EXISTING PIPING & DEMOLITION-UNDERGROUND CONDUIT SYSTEM BUILDING #46
(NIC) M - 8	NEW UNDERGROUND PIPING CONDUIT SYSTEM BUILDING #46
M - 9	EXISTING PIPING & DEMOLITION-UNDERGROUND CONDUIT SYSTEM AND PARTIAL TUNNEL T26-1
(NIC) M - 10	NEW UNDERGROUND PIPING CONDUIT SYSTEM FROM EXISTING T35-1 TO T46-1 BUILDING #46
(NIC) M - 11	EXISTING PIPING & DEMOLITION TUNNEL T43-3
(NIC) M - 12	ELEVATION OF EXISTING PIPING & DEMOLITION TUNNEL T43-3
M - 13	NEW PIPING ARRANGEMENT TUNNEL T43-3
(NIC) M - 14	NEW UNDERGROUND PIPING CONDUIT SYSTEM BUILDING #109
M - 15	EXISTING PIPING & DEMOLITION-BUILDING #30 CRAWL SPACE
M - 16	EXISTING PIPING & DEMOLITION-BUILDING #30 EQUIPMENT ROOM PLAN
M - 17	NEW PIPING-BUILDING #30 CRAWL SPACE
M - 18	NEW PIPING AND MECHANICAL EQUIPMENT ROOM PLAN-BUILDING #30
M - 19	EXISTING PIPING AND DEMOLITION BASEMENT LEVEL NORTH-BUILDING #26
M - 20	EXISTING PIPING AND DEMOLITION BASEMENT LEVEL SOUTH-BUILDING #26
M - 21	NEW PIPING AND MECHANICAL EQUIPMENT ROOM PLAN NORTH-BUILDING #26
M - 22	NEW PIPING AND MECHANICAL EQUIPMENT ROOM PLAN SOUTH-BUILDING #26
M - 23	EXISTING PIPING AND DEMOLITION-BUILDING #46
M - 24	NEW PIPING AND MECHANICAL EQUIPMENT ROOM PLAN-BUILDING #46
(NIC) M - 25	EXISTING PIPING AND DEMOLITION-BUILDING #109
(NIC) M - 26	NEW PIPING AND MECHANICAL EQUIPMENT ROOM PLAN-BUILDING #109
M - 27	EXISTING PIPING AND DEMOLITION-BUILDING #110
M - 28	NEW PIPING AND MECHANICAL EQUIPMENT ROOM PLAN-BUILDING #110
M - 29	PARTIAL SITE PLAN - NORTH SECTION
M - 30	NOT USED
M - 31	NOT USED
M - 32	NOT USED
M - 33	NOT USED
M - 34	NOT USED
M - 35	NOT USED
M - 36	EXISTING PIPING AND DEMOLITION-BUILDING #67 EQUIPMENT ROOM PLAN & OUTSIDE NORTH AREA
M - 37	NEW BOILERS & PIPINGS BUILDING #67 EQUIPMENT ROOM PLAN
M - 38	NEW BOILER ROOM PIPING FLOW DIAGRAMS
M - 39	NOT USED
M - 40	NOT USED
M - 41	NOT USED
M - 42	MISCELLANEOUS DETAILS
M - 43	MISCELLANEOUS DETAILS
M - 44	EQUIPMENT SCHEDULES

ELECTRICAL

DRAWING NUMBER	TITLE
E - 1	SYMBOL LIST, NOTES, ABBREVIATION LIST, EQUIPMENT CONNECTION SCHEDULE
E - 2	ELECTRICAL LIGHTING AND POWER PLAN TUNNEL T43-3
E - 3	PARTIAL SITE - SOUTH SECTION POWER PLAN & DISTRIBUTION DIAGRAM
E - 4	DIETARY BLDG. AND TUNNEL T26-1 AND ENLARGEMENT AREA #1 PLANS AND DIAGRAMS
E - 5	DIETARY BLDG. (#30) WEST MECHANICAL EQUIPMENT ROOM ELECTRICAL & DEMOLITION PLANS
(NIC) E - 6	ELECTRICAL & DEMOLITION PLANS BUILDING #46
(NIC) E - 7	LAUNDRY BLDG ELECTRICAL & DEMOLITION PLANS FIRST & MEZZANINE FLOORS/ BUILDING #109
E - 8	REHAB BLDG. #110 PARTIAL MECHANICAL EQUIPMENT ROOM ELECTRICAL & DEMOLITION PLANS
(NIC) E - 9	PARTIAL PLAN & POWER DISTRIBUTION DIAGRAM - BLDG. #35 MASON AND PLASTER BUILDING & TUNNEL T35-1
E - 10	ELECTRICAL & DEMOLITION PLANS MECHANICAL EQUIPMENT ROOM NORTH BUILDING #26 BASEMENT LEVEL
E - 11	ELECTRICAL & DEMOLITION PLANS MECHANICAL EQUIPMENT ROOM NORTH BUILDING #26 BASEMENT LEVEL
E - 12	ELECTRICAL & DEMOLITION PLANS, WIRING DIAGRAMS OF MISC. BUILDINGS
E - 13	ELECTRICAL - PARTIAL BOILER HOUSE OPERATING FLOOR PLAN (BUILDING #50)
E - 14	ELECTRICAL - PARTIAL SITE PLAN - SOUTH SECTION
E - 15	ELECTRICAL - PARTIAL SITE PLAN - SOUTH SECTION
E - 16	ELECTRICAL - LOWER LEVEL POWER PLAN, BUILDING #67 EQUIPMENT ROOM
E - 17	ELECTRICAL - PARTIAL SITE PLAN AND DETAILS - NORTH SECTION - BUILDING #67
E - 18	SINGLE LINE DIAGRAM, PANEL DETAIL AND SCHEDULE - BUILDING #67
E - 19	ELECTRICAL POWER PLAN & SINGLE LINE POWER DIAGRAM, BUILDING #46 (MENDEL BLDG.)
(NIC) E - 20	FIRST FLOOR/BUILDING #109 ELECTRICAL POWER PLAN
(NIC) E - 21	MEZZANINE FLOOR/BUILDING #109 ELECTRICAL POWER PLAN

STRUCTURAL

DRAWING NUMBER	TITLE
S - 1	GENERAL NOTES
S - 2	TUNNEL T43-3 LONGITUDINAL SECTION, SECTIONS & DETAILS
(NIC) S - 3	TUNNEL T43-3 ENLARGEMENT PLAN AND SECTIONS
S - 4	TUNNEL T27-1 - LONGITUDINAL SECTION AND DETAILS
S - 5	BUILDING #30, ENLARGEMENT PLAN AND SECTIONS
S - 6	ENLARGEMENT SECTIONS AND DETAILS

AS BUILT

DATE: FEBRUARY 3. 2003

REVISIONS			DRAWN	PREPARED	SEAL
NO.	DATE	REMARKS	GGL	APM/TMK	062-27858 LICENSED PROFESSIONAL ENGINEER ARMANDO P. MARASIGAN 1/30/03
			TRACED	APPROVED	
			CHECKED APM	APPROVED FRD	

J:\JUSTN\1642\MECH\G02.DGN

STV Incorporated
engineers/architects/planners/scientists/construction managers
70 W. MADISON ST. SUITE 2840 CHICAGO, IL 60602

CAPITAL DEVELOPMENT BOARD

State of Illinois
George H. Ryan, Governor

TUNNEL AND STEAM PIPING RENOVATIONS
INDEX OF DRAWINGS

ELGIN MENTAL HEALTH CENTER
750 SOUTH STATE STREET
ELGIN, ILLINOIS 60123

CDB PROJECT NO: 321-055-097 PH-2
DATE: FEBRUARY 3, 2003
SHEET NO: G-2
OF SHEETS

NO.	DATE	REVISIONS	REMARKS

DRAWN GGL · TRACED · CHECKED APM · PREPARED APM · APPROVED · APPROVED FRD

SEAL: ALFREDO P. MANAOIS 062-27856 LICENSED PROFESSIONAL ENGINEER OF ILLINOIS

STV Incorporated
engineers/architects/planners/scientists/construction managers
70 W. MADISON ST. SUITE 2840 CHICAGO, IL 60602

CAPITAL DEVELOPMENT BOARD

State of Illinois
George H. Ryan, Governor

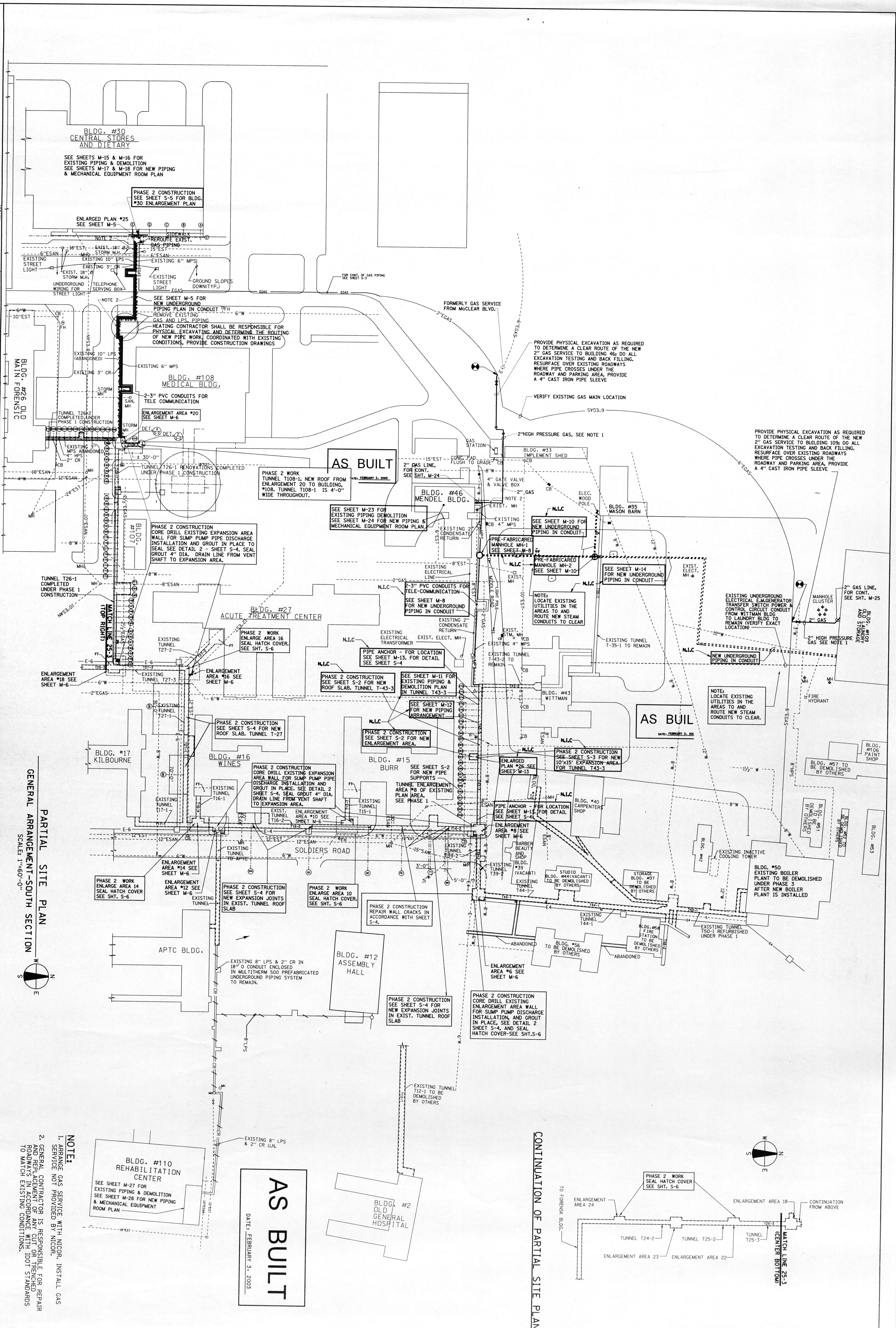

NOTE:

1. ARRANGE GAS SERVICE WITH NICOR. INSTALL GAS SERVICE NOT PROVIDED BY NICOR.
2. GENERAL CONTRACTOR IS RESPONSIBLE FOR REPAIR AND REPLACEMENT OF ANY CUT OR TRENCHED ROADWAYS IN ACCORDANCE WITH IDOT STANDARDS TO MATCH EXISTING CONDITIONS.

TUNNEL AND STEAM PIPING RENOVATIONS
SITE LOCATION PLAN - SOUTH SECTION

ELGIN MENTAL HEALTH CENTER
750 SOUTH STATE STREET
ELGIN, ILLINOIS 60123

CDB PROJECT NO: 321-055-097 PH-2
DATE: FEBRUARY 3, 2003
SHEET NO: G-3
OF SHEETS

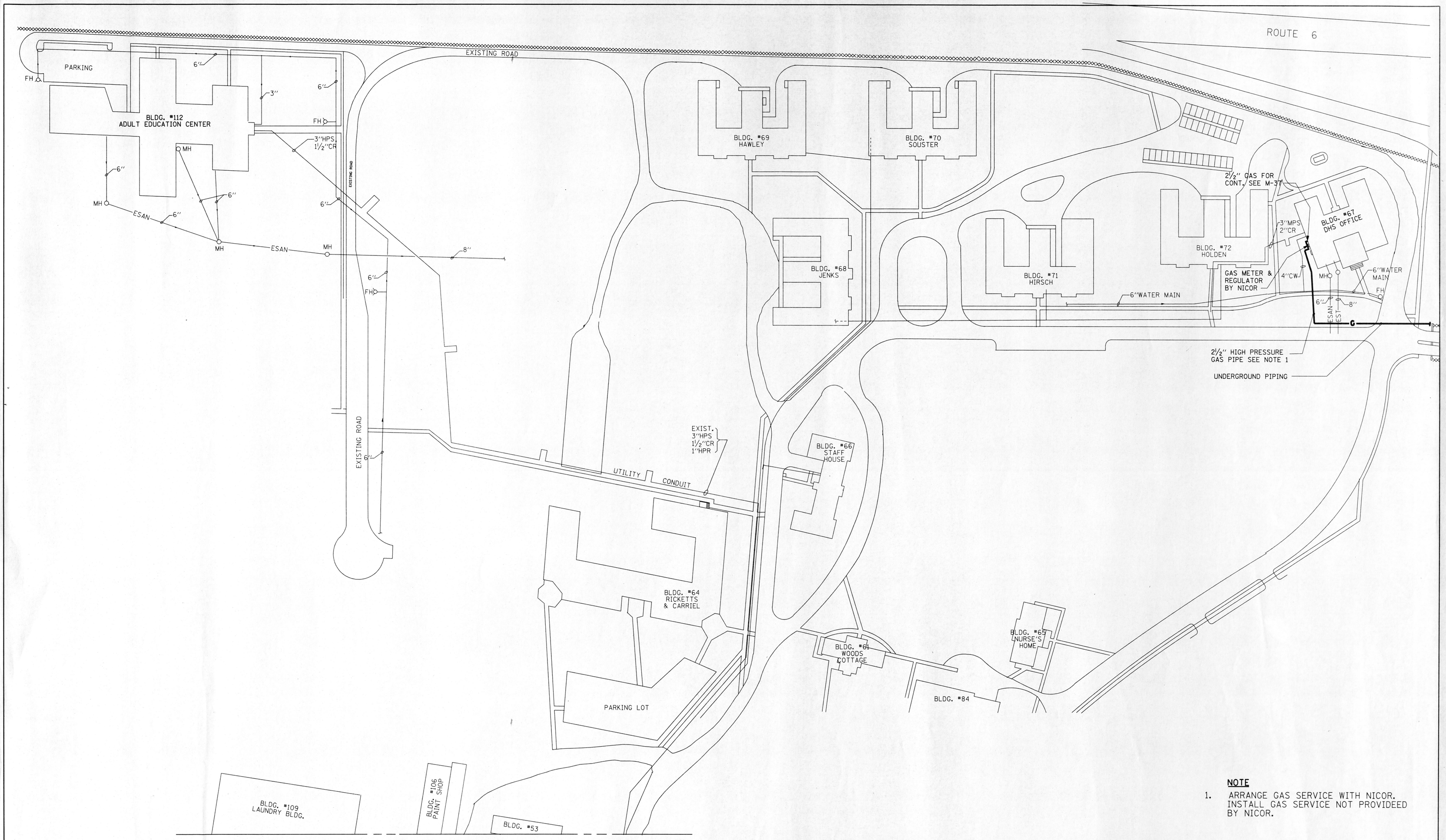

NOTE

1. ARRANGE GAS SERVICE WITH NICOR. INSTALL GAS SERVICE NOT PROVIDEED BY NICOR.

PARTIAL SITE PLAN - NORTH SECTION

SCALE: 1"=60'-0"

N W E S

AS BUILT

DATE: FEBRUARY 3, 2003

REVISIONS			DRAWN	PREPARED
NO.	DATE	REMARKS	GGL	APM
			TRACED	APPROVED
			CHECKED	APPROVED
			APM	FRD

SEAL: ALFREDO P. MANALOTO 062-27058 LICENSED PROFESSIONAL ENGINEER OF ILLINOIS

STV Incorporated
engineers/architects/planners/scientists/construction managers
70 W. MADISON ST. SUITE 2840 CHICAGO, IL 60602

CAPITAL DEVELOPMENT BOARD

State of Illinois
George H. Ryan, Governor

TUNNEL AND STEAM PIPING RENOVATIONS
PARTIAL SITE PLAN - NORTH SECTION

ELGIN MENTAL HEALTH CENTER
750 SOUTH STATE STREET
ELGIN, ILLINOIS 60123

CDB PROJECT NO: 321-055-097 PH-2
DATE: FEBRUARY 3, 2003
SHEET NO: G-4
OF SHEETS

J:#USTN#1642#MECH#G04.DGN

\PROJECTS\1642\MECH\G04.DGN 02/03/2003 02:13:15 PM

SYMBOLS LIST

- EXISTING PIPE TUNNEL TO REMAIN AND BE MODIFIED
- EXISTING PIPE TUNNEL-ABANDONED
- NEW PIPING
- EXISTING PIPING TO REMAIN
- EXISTING PIPING TO BE REMOVED
- (HPS) HIGH PRESSURE STEAM PIPING
- (MPS) MEDIUM PRESSURE STEAM PIPING
- (LPS) LOW PRESSURE STEAM PIPING
- CR — CONDENSATE (PUMP) RETURN
- HPR — HIGH PRESSURE CONDENSATE RETURN
- MPR — MEDIUM PRESSURE CONDENSATE RETURN
- G — NATURAL GAS PIPING
- PD — PUMP DISCHARGE
- DHW — DOMESTIC HOT WATER SUPPLY PIPING
- DNWR — DOMESTIC HOT WATER RETURN PIPING
- CW — DOMESTIC COLD WATER PIPING
- C — ELECTRICAL CONDUIT
- OR X — PIPE ANCHOR SUPPORTED FROM WALL
- PIPE ANCHOR
- CTS — CONDENSING WATER SUPPLY
- CTR — CONDENSING WATER RETURN
- CHWS — CHILLED WATER SUPPLY
- CHWR — CHILLED WATER RETURN
- HHWR — HEATING HOT WATER RETURN
- HHWS — HEATING HOT WATER SUPPLY
- HCWR — HEATING/COOLING WATER RETURN
- HCWS — HEATING/COOLING WATER SUPPLY

- PIPE GUIDE
- GATE VALVE (O.S. & Y)
- GATE VALVE (N.R.S.)
- STRAINER
- (PRV) PRESSURE REDUCING VALVE
- CONTROL VALVE
- CHECK VALVE
- STEAM TRAP (THERMO-MATIC OR INVERTED BUCKET)
- STEAM TRAP (FLOAT & THERMOSTATIC)
- V — VENT PIPING
- FH — FIRE HYDRANT
- ESAN — EXISTING SANITARY SEWER TO REMAIN
- EST — EXISTING STORM SEWER TO REMAIM
- EGAS — EXISTING GAS LINE TO REMAIN
- W — EXISTING WATER LINE TO REMAIN
- PR — EXISTING PUMPED CONDENSATE RETURN TO REMAIN
- CR — EXISTING CONDENSATE RETURN TO REMAIN
- MPR — EXISTING MEDIUM PRESSURE CONDENSATE RETURN TO REMAIN
- EXISTING FENCE
- GAS COCK

ABBREVIATIONS

(1)	PIPE SUPPORT NUMBER
O. S. & Y.	OUTSIDE STEM & YOKE
N. R. S.	NON-RISING STEM
TOO-O	TUNNEL IDENTIFICATION
E.F.	EXHAUST FAN
O.A.I.	OUTSIDE AIR INTAKE
C.P.	CONDENSATE PUMP & RECEIVER
F.T.	FLASH TANK
CB	CATCH BASIN
MH	MANHOLE
N.I.C.	NOT IN CONTRACT

BLDG. #30
CENTRAL STORES
AND DIETARY

SEE SHEETS M-15 & M-16 FOR EXISTING PIPING & DEMOLITION
SEE SHEETS M-17 & M-18 FOR NEW PIPING & MECHANICAL EQUIPMENT ROOM PLAN

ENLARGED PLAN #25
SEE SHEET M-5

SIDEWALK
REROUTE EXIST. GAS PIPING
18"EST
EXIST. 18" Ø STORM M.H.
15"EST
6"ESAN
MH
6"ESAN
EXISTING 10" LPS
EXISTING 6" MPS
EXISTING STREET LIGHT
EXISTING 3" CR
EXIST. 18" Ø STORM M.H.
EGAS
EXISTING STREET LIGHT
GROUND SLOPES DOWN(TYP.)
UNDERGROUND WIRING FOR STREET LIGHT
TELEPHONE SERVING BOX
EGAS
EGAS
EGAS
FOR CONT. OF GAS PIPING SEE SHEET G-3
SEE SHEET M-5 FOR NEW UNDERGROUND PIPING PLAN IN CONDUIT
FH
6"W
10"EST
CB
FH
REMOVE EXISTING GAS AND LPS, PIPING
8"ESAN
EXISTING 10" LPS (ABANDONED)
SEE NOTE 1 THIS SHEET
EXISTING 6" MPS
EXISTING 3" CR
STORM MH
BLDG. #108
MEDICAL BLDG.
2-3" PVC CONDUITS FOR TELE COMMUNICATION
SAN. MH
BLDG. #26
OLD MAIN
FORENSIC
BUILDING
TUNNEL T26-2
COMPLETED UNDER
PHASE 1 CONSTRUCTION
STORM MH
ENLARGEMENT AREA #20
SEE SHEET M-6
T26-2
EXISTING 3" MPS ABANDONED
4" HPS
2" CR
SEE SHEETS M-19 & M-20 FOR EXISTING PIPING & DEMOLITION
SEE SHEETS M-21 & M-22 FOR NEW PIPING & MECHANICAL EQUIPMENT ROOM PLAN
CB
MH
10"ESAN
4"W
12"ESAN
24"EST
MH
TUNNEL T26-1 RENOVATIONS COMPLETED UNDER PHASE 1 CONSTRUCTION
18"EST
MATCH LINE "A" SEE SHEET M-2
FH
E-1
4"W

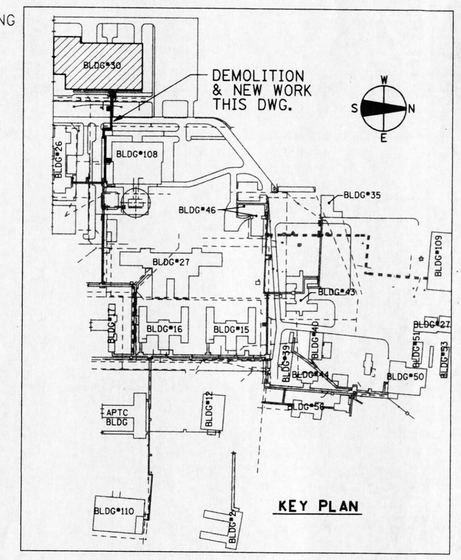

AS BUILT
DATE: FEBRUARY 3, 2003

NOTE:
1. HEATING CONTRACTOR SHALL OBTAIN SERVICE OF A CORROSION ENGINEERS. PROVIDE CATHODIC PROTECTING FOR UNDERGROUND PIPING TO BUILDING #30 IN ACCORDANCE WITH THE CORROSION ENGINEERS RECOMMENDATIONS.

PARTIAL SITE PLAN
SCALE: 1"=30'-0"

REVISIONS			DRAWN	PREPARED
NO.	DATE	REMARKS	GGL	APM
			TRACED	APPROVED
			CHECKED	APPROVED
			APM	FRD

SEAL: ALFREDO P. MAGAÑO, 062-27853, LICENSED PROFESSIONAL ENGINEER, STATE OF ILLINOIS

STV Incorporated
engineers/architects/planners/scientists/construction managers
70 W. MADISON ST. SUITE 2840 CHICAGO, IL 60602

CAPITAL DEVELOPMENT BOARD

State of Illinois
George H. Ryan, Governor

TUNNEL AND STEAM PIPING RENOVATIONS
PARTIAL SITE PLAN - SOUTH SECTION

ELGIN MENTAL HEALTH CENTER
750 SOUTH STATE STREET
ELGIN, ILLINOIS 60123

CDB PROJECT NO: 321-055-097 PH-2
DATE: FEBRUARY 3, 2003
SHEET NO: M-1 OF SHEETS

J:\PROJECTS\16426\MECH\MOLDGN

I:\PROJECTS\16426\MECH\M01.DGN 02/03/2003 03:33:33 PM

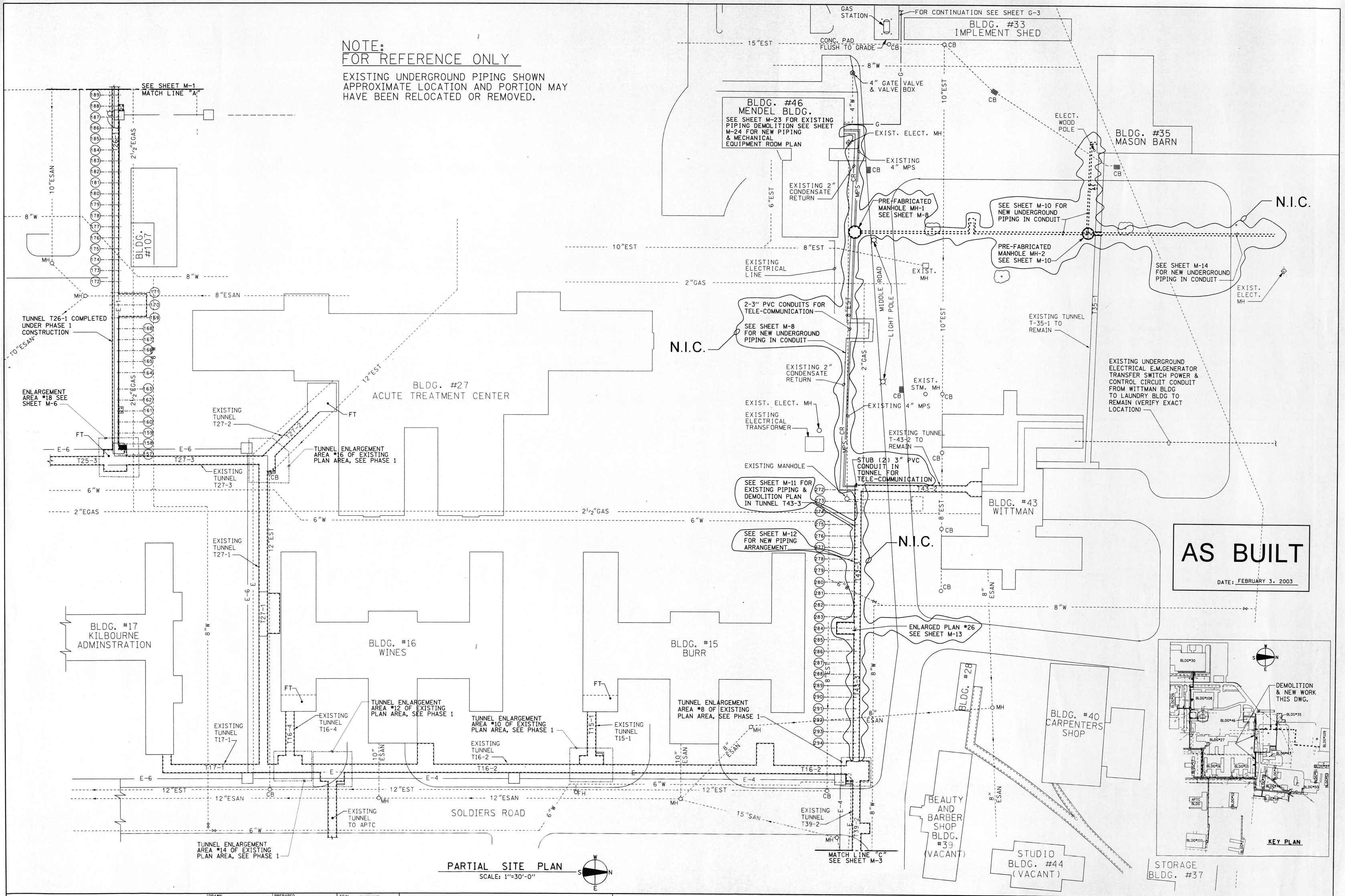

REVISIONS			DRAWN	PREPARED	SEAL
NO.	DATE	REMARKS	GGL	APM	
			TRACED	APPROVED	
			CHECKED	APPROVED	
			APM	FRD	

STV Incorporated
engineers/architects/planners/scientists/construction managers
70 W. MADISON ST. SUITE 2840 CHICAGO, IL 60602

CAPITAL DEVELOPMENT BOARD

State of Illinois
George H. Ryan, Governor

TUNNEL AND STEAM PIPING RENOVATIONS
PARTIAL SITE PLAN - SOUTH SECTION

ELGIN MENTAL HEALTH CENTER
750 SOUTH STATE STREET
ELGIN, ILLINOIS 60123

CDB PROJECT NO: 321-055-097 PH-2
DATE: FEBRUARY 3, 2003
SHEET NO: M-2
OF SHEETS

I:\PROJECTS\1642\MECH\M02.DGN

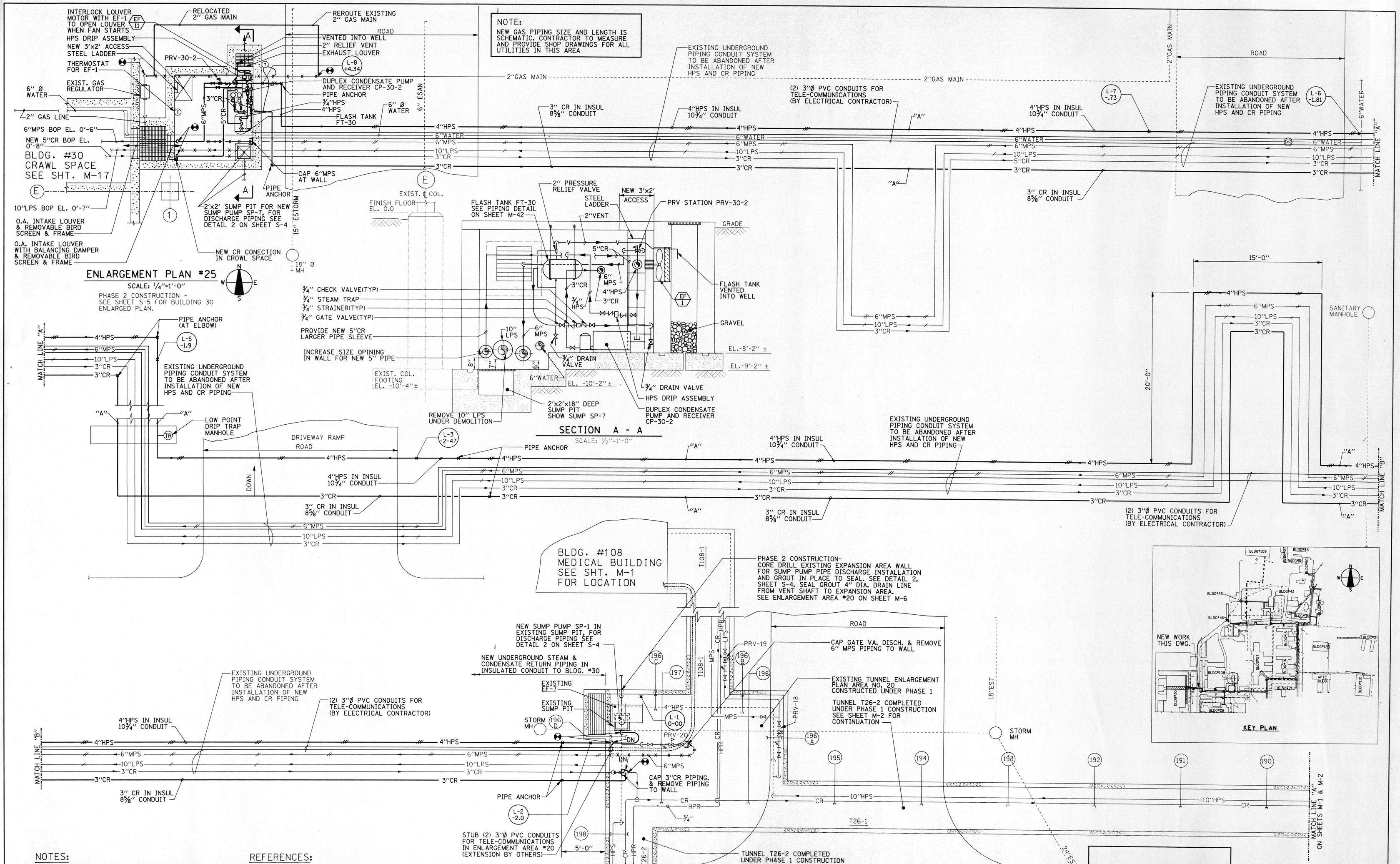

NOTES:

1. SURVEY ALL EXISTING CONDITIONS AND NOTE THE FULL REQUIREMENT OF RENOVATION REQUIRED INCLUDING DEMOLITION, TEMPORARY PIPING & EQUIPMENT AND INSTALLATION. CONTRACTOR SHALL FIELD FIT THE INSTALLATION AND SUBMIT SHOP DRAWINGS AND COORDINATION DRAWINGS. THESE DRAWINGS SHOW THE GENERAL INTENT.

REFERENCES:

NEW UNDERGROUND PIPING CONDUIT SYSTEM & TUNNEL ENLARGEMENT PLAN #20

SCALE: 1/4"=1'-0"

AS BUILT

DATE: FEBRUARY 3, 2003

LEGEND

"A" ANODE LOCATION

Ⓣ TEST STATION

Ⓛ ELEV. OF TOP 4" H.P.S. FROM TOP OF ENLARG #20

REVISIONS			DRAWN	PREPARED	SEAL
NO.	DATE	REMARKS	GGL	APM	
			TRACED	APPROVED	
			CHECKED	APPROVED	
	11-06-02	AS BUILT DRAWING	APM	FRD	

STV Incorporated
engineers/architects/planners/scientists/construction managers
70 W. MADISON ST. SUITE 2840 CHICAGO, IL 60602

CAPITAL DEVELOPMENT BOARD

State of Illinois
George H. Ryan, Governor

TUNNEL AND STEAM PIPING RENOVATIONS
NEW PIPING ARRANGEMENT, UNDERGROUND PIPING CONDUIT SYSTEM & PARTIAL TUNNEL T26-1

ELGIN MENTAL HEALTH CENTER
750 SOUTH STATE STREET
ELGIN, ILLINOIS 60123

CDB PROJECT NO: 321-055-097 PH-2
DATE FEBRUARY 3, 2003
SHEET NO: M-5
OF SHEETS

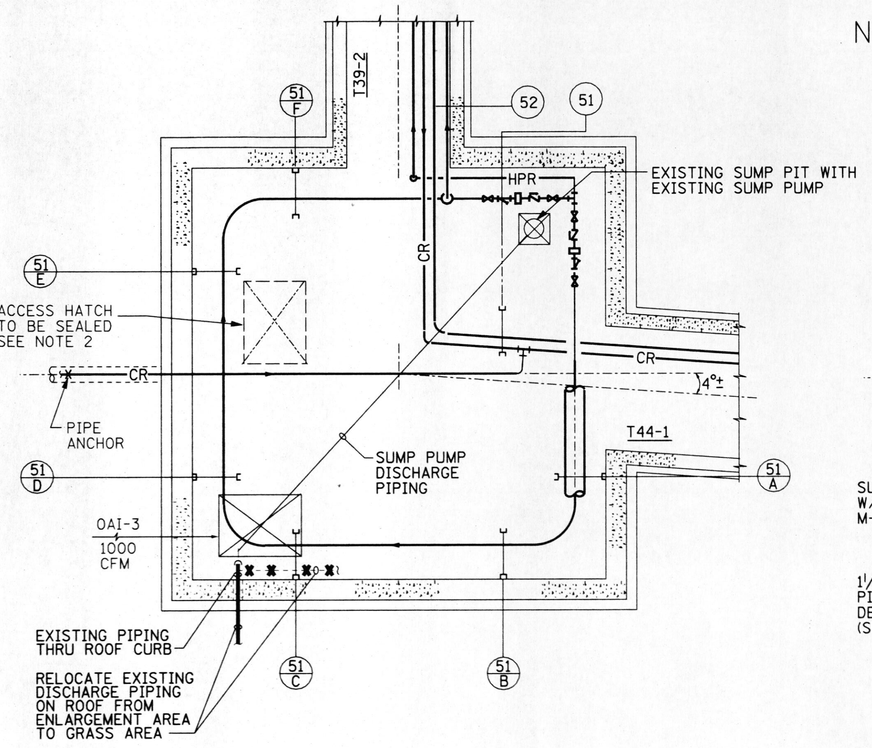

ENLARGEMENT AREA #6 (G-3 & M-3)
SCALE: 1/4"=1'-0"

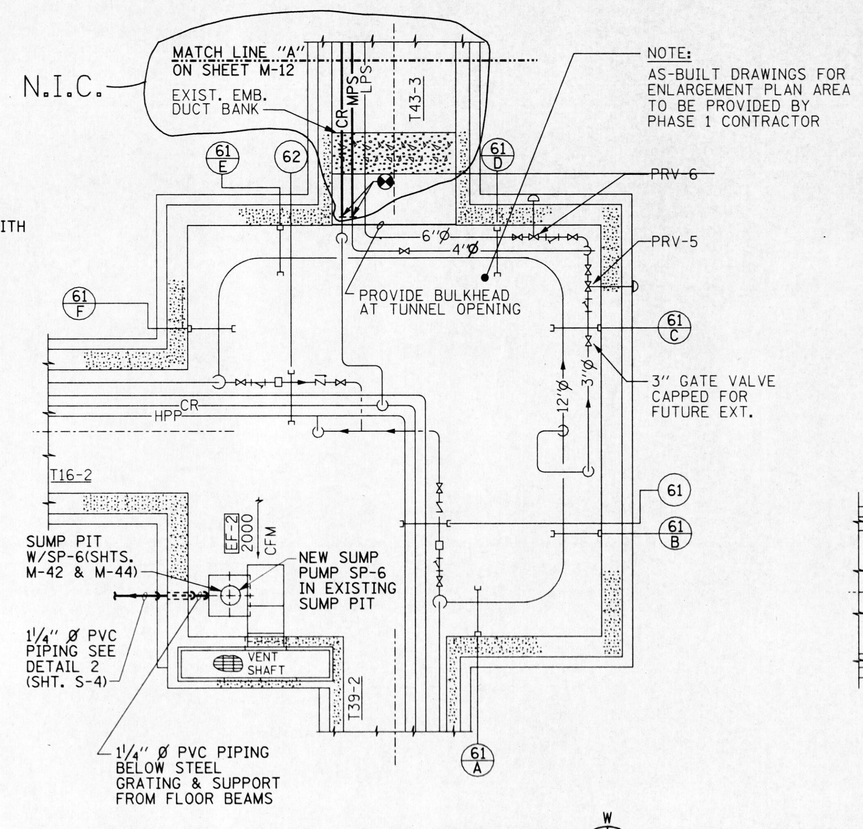

ENLARGEMENT AREA #8 (G-3 & M-2)
SCALE: 1/4"=1'-0"

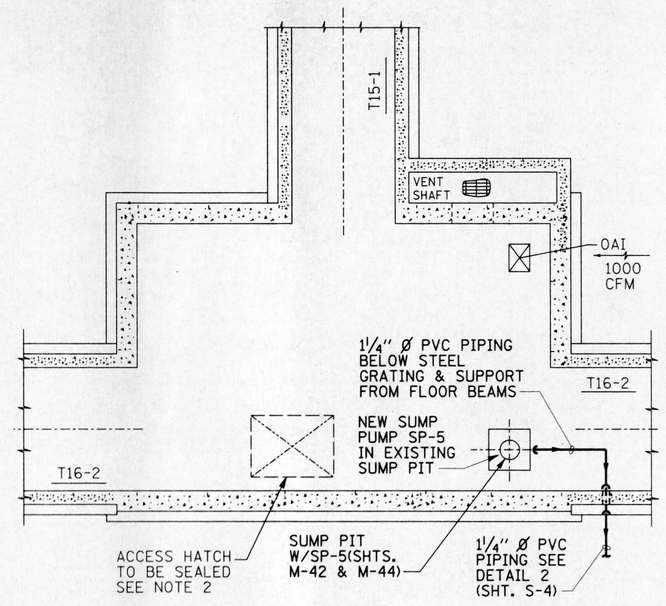

ENLARGEMENT AREA #10 (G-3 & M-2)
SCALE: 1/4"=1'-0"

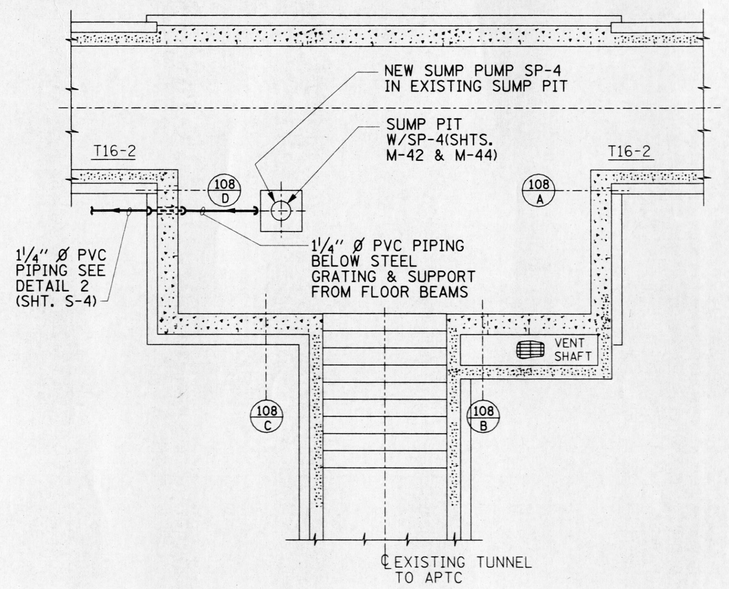

ENLARGEMENT AREA #12 (G-3 & M-2)
SCALE: 1/4"=1'-0"

NOTES:

1. SURVEY ALL EXISTING CONDITIONS AND NOTE THE FULL EXTENT OF RENOVATION REQUIRED, INCLUDING DEMOLITION, TEMPORARY PIPING & EQUIPMENT AND INSTALLATION. CONTRACTOR SHALL FIELD FIT THE INSTALLATION AND SUBMIT SHOP DRAWINGS AND COORDINATION DRAWINGS. THIS DRAWING SHOWS THE GENERAL INTENT.
2. SEE SHEET S-6 FOR EXISTING HATCH TO BE SEALED BY GENERAL CONTRACTOR

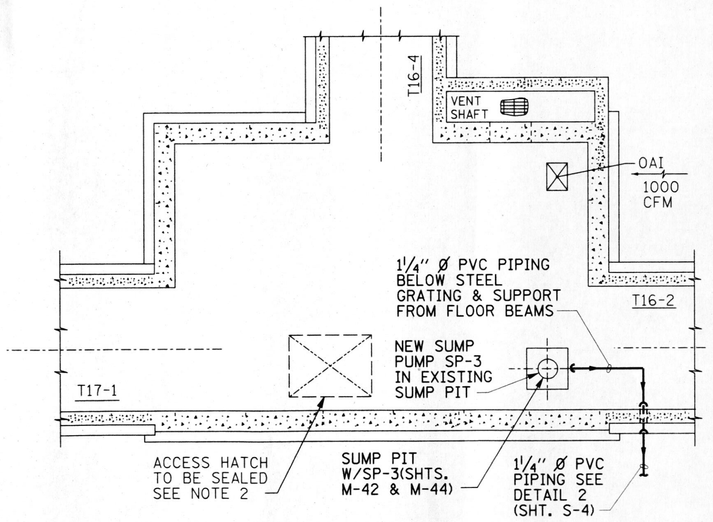

ENLARGEMENT AREA #14 (G-3 & M-2)
SCALE: 1/4"=1'-0"

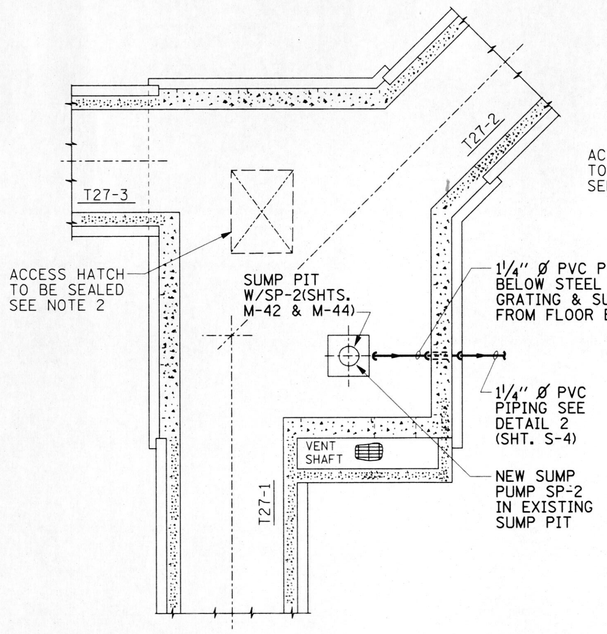

ENLARGEMENT AREA #16 (G-3 & M-2)
SCALE: 1/4"=1'-0"

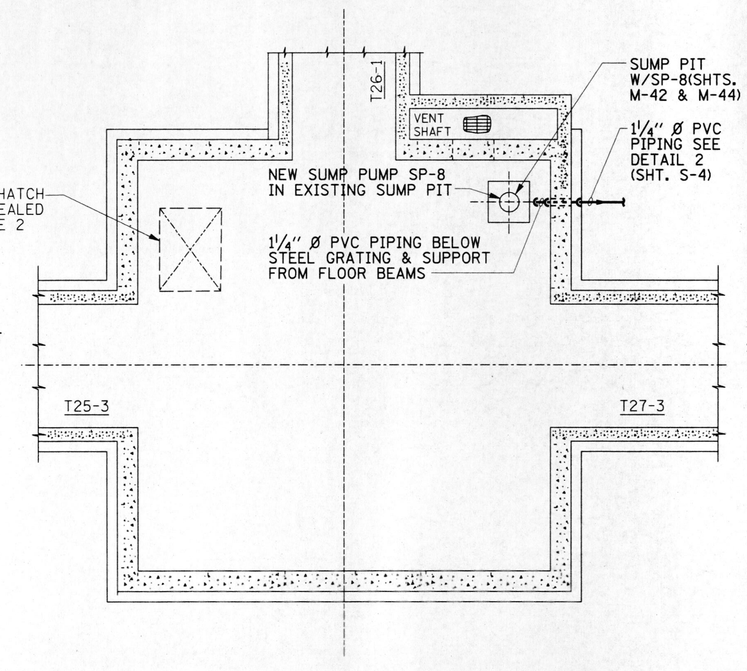

ENLARGEMENT AREA #18 (G-3 & M-2)
SCALE: 1/4"=1'-0"

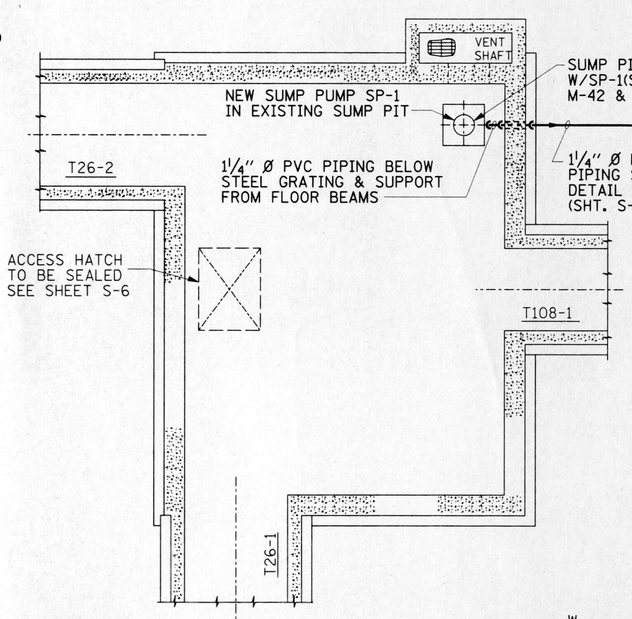

ENLARGEMENT AREA #20 (G-3 & M-1)
SCALE: 1/4"=1'-0"

REFERENCES:

G-3, M-1, M-2, M-42, M-44, S-6

D DRY WELL TYP.

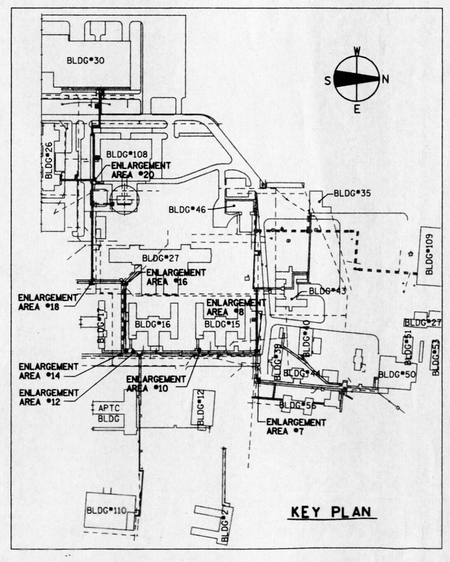

AS BUILT

DATE: FEBRUARY 3, 2003

REVISIONS			DRAWN	PREPARED
NO.	DATE	REMARKS	GGL	APM
			TRACED	APPROVED
	11-06-02	AS BUILT DRAWING	CHECKED APM	APPROVED FRD

SEAL: ILLINOIS REGISTERED PROFESSIONAL ENGINEER 062-027878 11/30/03

STV Incorporated
engineers/architects/planners/scientists/construction managers
70 W. MADISON ST. SUITE 2840 CHICAGO, IL 60602

CAPITAL DEVELOPMENT BOARD

State of Illinois
George H. Ryan, Governor

TUNNEL AND STEAM PIPING RENOVATIONS
SUMP PUMP/PIT ENLARGEMENT PLANS
ELGIN MENTAL HEALTH CENTER
750 SOUTH STATE STREET
ELGIN, ILLINOIS 60123

CDB PROJECT NO: 321-055-097 PH-2
DATE: FEBRUARY 3, 2003
SHEET NO: M-6
OF SHEETS

\\PROJECTS\1645\MECH\M06.dgn 12/03/2003 08:28:33 PM

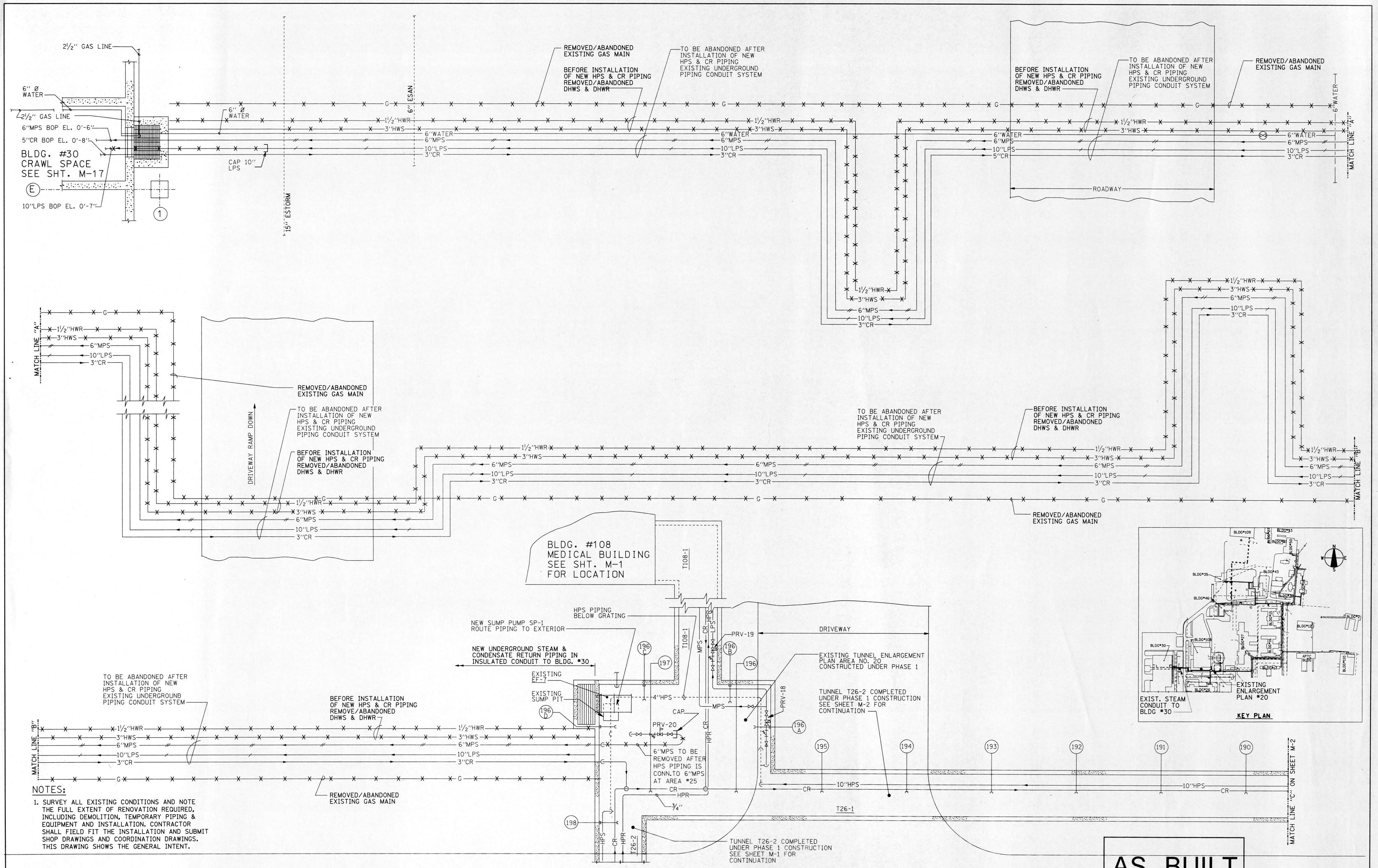

NOTES:

1. SURVEY ALL EXISTING CONDITIONS AND NOTE THE FULL EXTENT OF RENOVATION REQUIRED, INCLUDING DEMOLITION, TEMPORARY PIPING & EQUIPMENT AND INSTALLATION. CONTRACTOR SHALL FIELD FIT THE INSTALLATION AND SUBMIT SHOP DRAWINGS AND COORDINATION DRAWINGS. THIS DRAWING SHOWS THE GENERAL INTENT.

REFERENCES:

G-3, M-1, M-5, M-6

EXISTING PIPING & DEMOLITION-UNDERGROUND CONDUIT SYSTEM & PARTIAL TUNNEL T26-1

SCALE: NONE

AS BUILT

DATE: FEBRUARY 3, 2003

REVISIONS			DRAWN	PREPARED	SEAL
NO.	DATE	REMARKS	GGL	APM	
			TRACED	APPROVED	
			CHECKED APM	APPROVED FRD	

STV Incorporated
engineers/architects/planners/scientists/construction managers
70 W. MADISON ST. SUITE 2840 CHICAGO, IL 60602

CAPITAL DEVELOPMENT BOARD

State of Illinois
George H. Ryan, Governor

TUNNEL AND STEAM PIPING RENOVATIONS
EXISTING PIPING & DEMOLITION-UNDERGROUND CONDUIT SYSTEM & PARTIAL TUNNEL T26-1

ELGIN MENTAL HEALTH CENTER
750 SOUTH STATE STREET
ELGIN, ILLINOIS 60123

CDB PROJECT NO: 321-055-097 PH-2
DATE FEBRUARY 3, 2003
SHEET NO: M-9
OF SHEETS

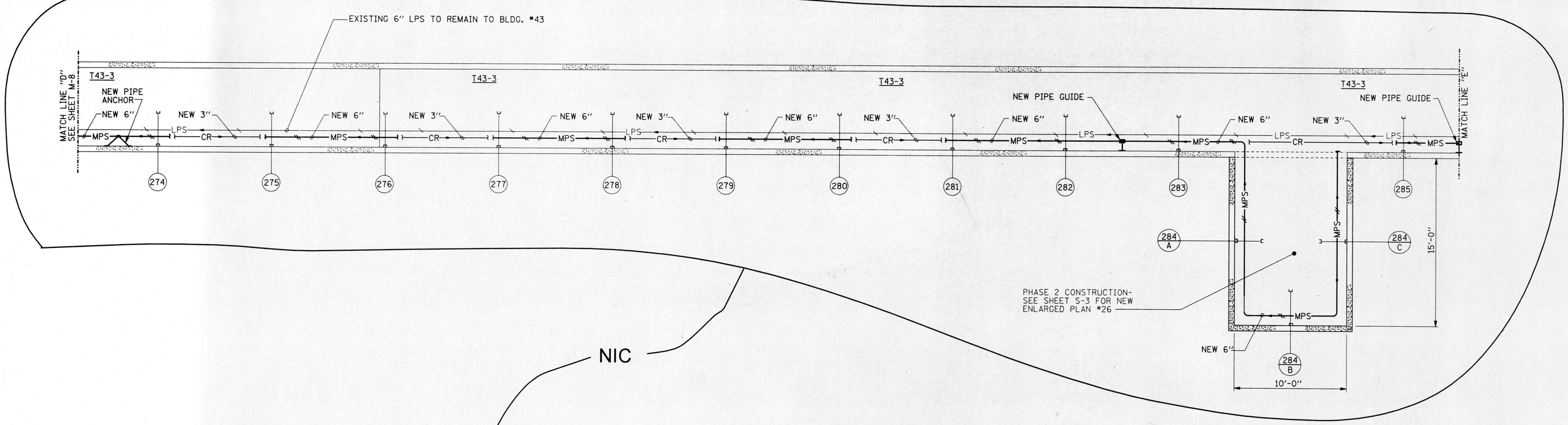

NIC

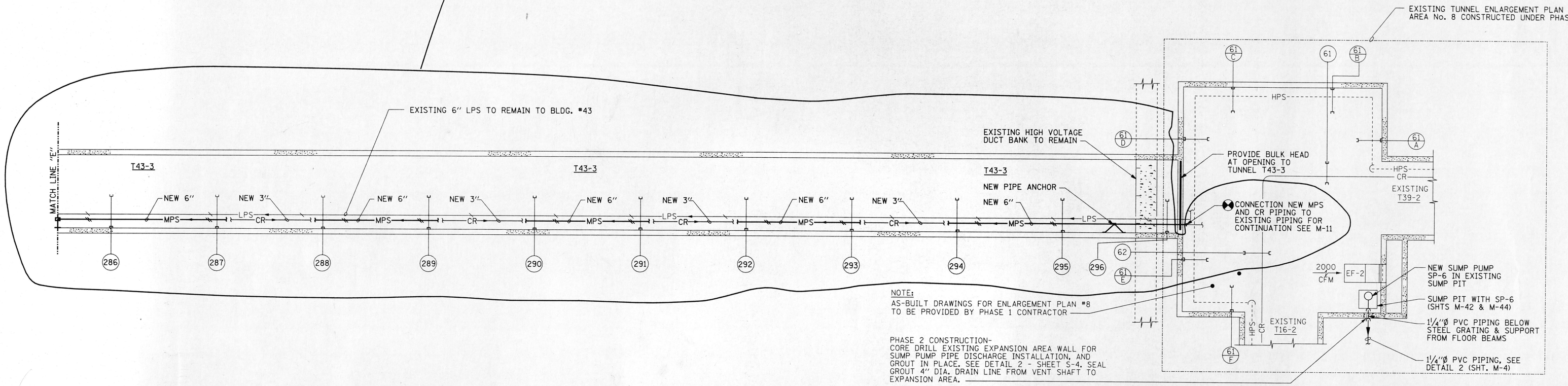

NEW PIPING ARRANGEMENTS TUNNEL T43-3

SCALE: 1/4"=1'-0"

AS BUILT

DATE: FEBRUARY 3, 2003

NOTES:

1. SURVEY ALL EXISTING CONDITIONS AND NOTE THE FULL EXTENT OF RENOVATION REQUIRED, INCLUDING DEMOLITION, TEMPORARY PIPING & EQUIPMENT AND INSTALLATION. CONTRACTOR SHALL FIELD FIT THE INSTALLATION AND SUBMIT SHOP DRAWINGS AND COORDINATION DRAWINGS. THIS DRAWING SHOWS THE GENERAL INTENT.

REFERENCES:

M-2, M-6, M-8, M-11 & M-12

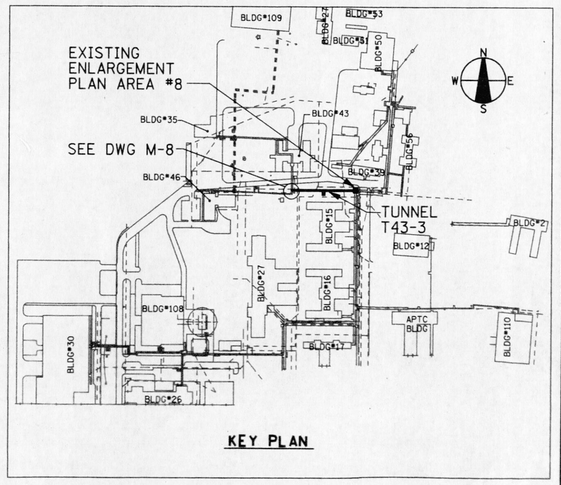

REVISIONS			DRAWN	PREPARED
NO.	DATE	REMARKS	GGL	APM
			TRACED	APPROVED
			CHECKED APM	APPROVED FRD

SEAL

STV Incorporated
engineers/architects/planners/scientists/construction managers
70 W. MADISON ST. SUITE 2840 CHICAGO, IL 60602

CAPITAL DEVELOPMENT BOARD

State of Illinois
George H. Ryan, Governor

TUNNEL AND STEAM PIPING RENOVATIONS
NEW PIPING ARRANGEMENTS
TUNNEL T43-3

ELGIN MENTAL HEALTH CENTER
750 SOUTH STATE STREET
ELGIN, ILLINOIS 60123

CDB PROJECT NO: 321-055-097 PH-2
DATE: FEBRUARY 3, 2003
SHEET NO: M-13
OF SHEETS

\PROJECTS\164\MECH\ME3.DGN 02/03/2003 03:40:28 PM

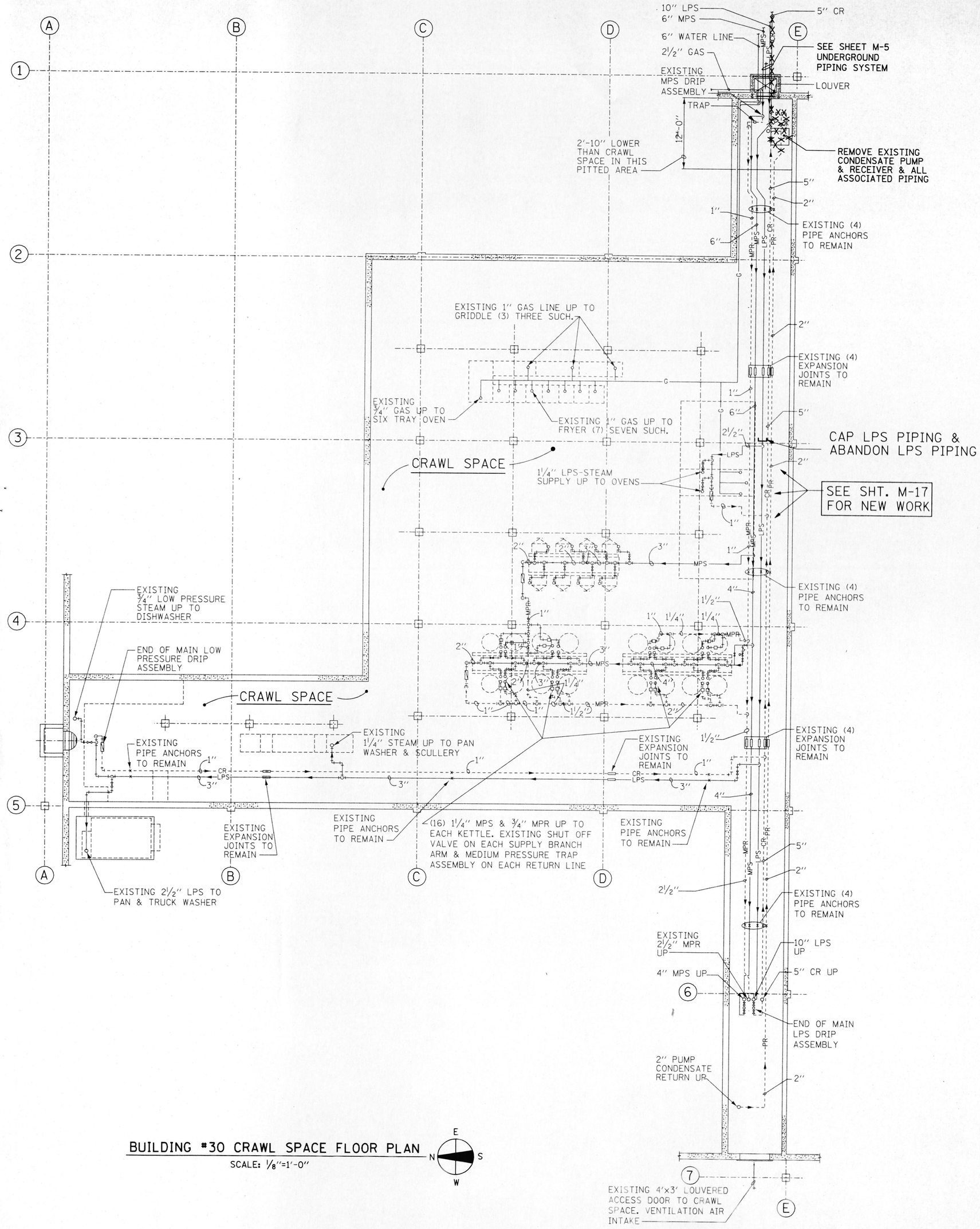

BUILDING #30 CRAWL SPACE FLOOR PLAN

SCALE: 1/8"=1'-0"

AS BUILT

DATE: FEBRUARY 3, 2003

NOTES:

1. SURVEY ALL EXISTING CONDITIONS AND NOTE THE FULL EXTENT OF RENOVATION REQUIRED, INCLUDING DEMOLITION, TEMPORARY PIPING & EQUIPMENT AND INSTALLATION. CONTRACTOR SHALL FIELD FIT THE INSTALLATION AND SUBMIT SHOP DRAWINGS AND COORDINATION DRAWINGS. THIS DRAWING SHOWS THE GENERAL INTENT.

REFERENCES:

M-1, M-5, M-6, M-16, M-17, M-18

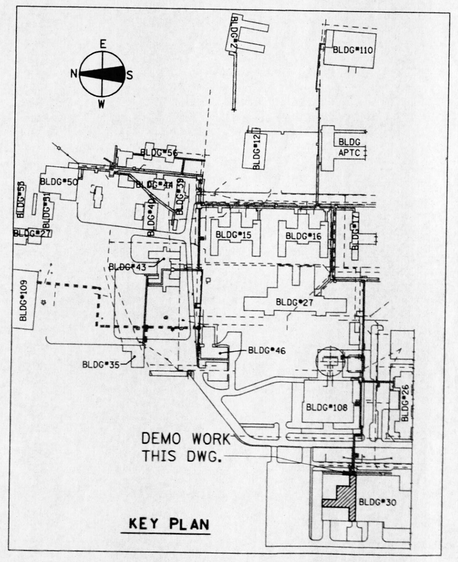

REVISIONS			DRAWN	PREPARED	SEAL
NO.	DATE	REMARKS	GGL	APM	
			TRACED	APPROVED	
			CHECKED	APPROVED	
			APM	FRD	

STV Incorporated
engineers/architects/planners/scientists/construction managers
70 W. MADISON ST. SUITE 2840 CHICAGO, IL 60602

CAPITAL DEVELOPMENT BOARD

State of Illinois
George H. Ryan, Governor

TUNNEL AND STEAM PIPING RENOVATIONS
EXISTING PIPING & DEMOLITION
BUILDING #30 CRAWL SPACE

ELGIN MENTAL HEALTH CENTER
750 SOUTH STATE STREET
ELGIN, ILLINOIS 60123

CDB PROJECT NO: 321-055-097 PH-2
DATE: FEBRUARY 3, 2003
SHEET NO: M-15
OF SHEETS

PROJECTS\1642\MECH\M15.DGN 02/07/2003 08:45:35 PM

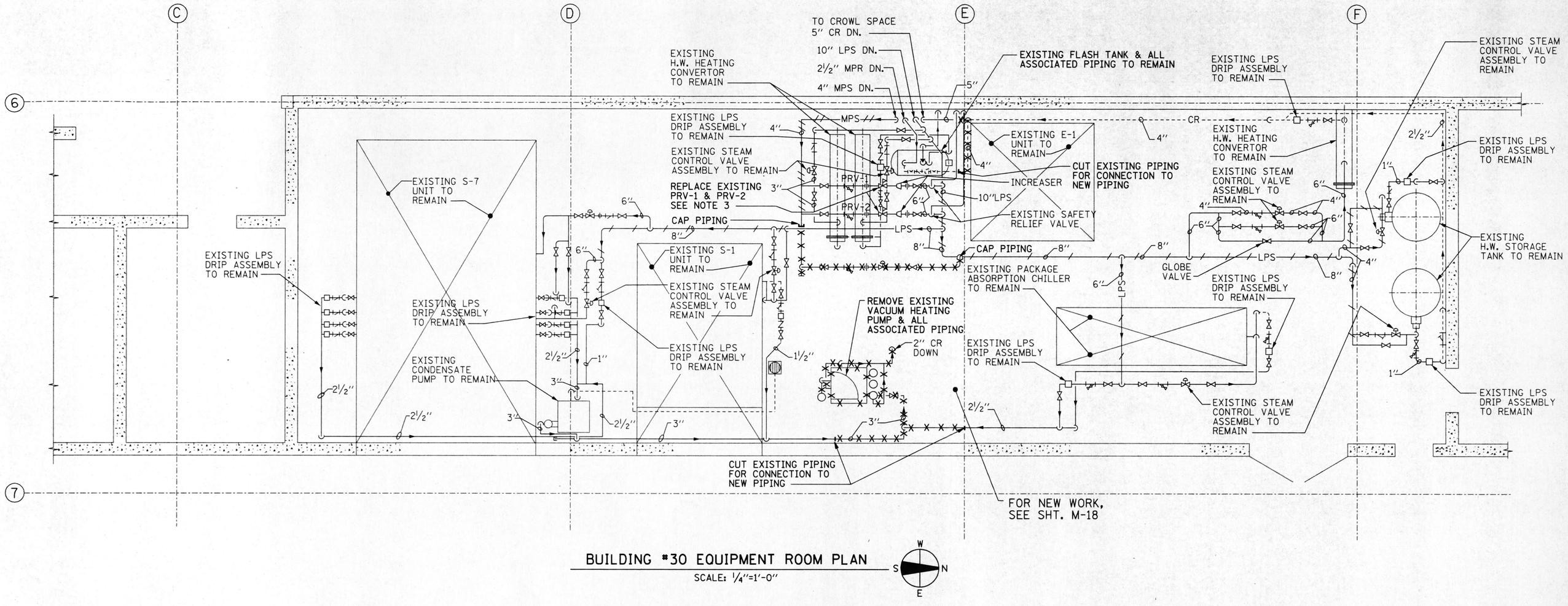

BUILDING #30 EQUIPMENT ROOM PLAN

SCALE: ¼"=1'-0"

NOTES:

1. REMOVE EXISTING VACUUM HEATING PUMP AND PIPING AS SHOWN AND AS REQUIRED.
2. PROVIDE TEMPORARY CONDENSATE PIPE CONNECTION AND PUMP AS REQUIRED UNTIL NEW CONDENSATE PUMPS ARE IN PLACE WHERE INDICATED.
3. EXISTING PRV-1 AND PRV-2 ARE TO BE REPLACED SEE SHEET M-18 & M-44 FOR SIZE AND CAPACITY.
4. SURVEY ALL EXISTING CONDITIONS AND NOTE THE FULL EXTENT OF RENOVATION REQUIRED, INCLUDING DEMOLITION, TEMPORARY PIPING & EQUIPMENT AND INSTALLATION. CONTRACTOR SHALL FIELD FIT THE INSTALLATION AND SUBMIT SHOP DRAWINGS AND COORDINATION DRAWINGS. THIS DRAWING SHOWS THE GENERAL INTENT.

REFERENCE:

M-15, M-17, M-18

AS BUILT

DATE: FEBRUARY 3, 2003

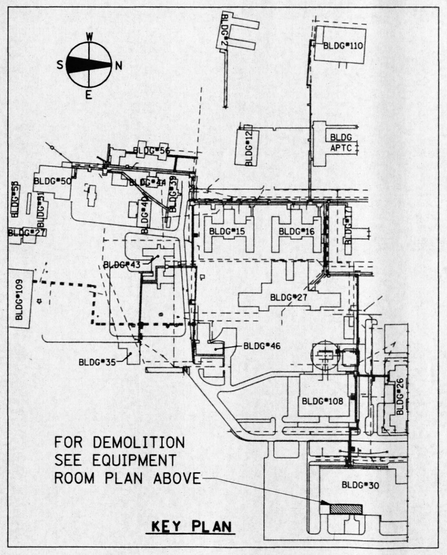

REVISIONS			DRAWN	PREPARED	SEAL
NO.	DATE	REMARKS	GGL	APM	062-27858 LICENSED PROFESSIONAL ENGINEER
			TRACED	APPROVED	
			CHECKED APM	APPROVED FRD	

STV Incorporated
engineers/architects/planners/scientists/construction managers
70 W. MADISON ST. SUITE 2840 CHICAGO, IL 60602

CAPITAL DEVELOPMENT BOARD

State of Illinois
George H. Ryan, Governor

TUNNEL AND STEAM PIPING RENOVATIONS
EXISTING PIPING AND DEMOLITION
BUILDING #30 EQUIPMENT ROOM PLAN

ELGIN MENTAL HEALTH CENTER
750 SOUTH STATE STREET
ELGIN, ILLINOIS 60123

CDB PROJECT NO: 321-055-097 PH-2
DATE: FEBRUARY 3, 2003
SHEET NO: M-16
OF SHEETS

PROJECTS\1642\MECH\M16.DWG 02/03/2003 03:52:56 PM

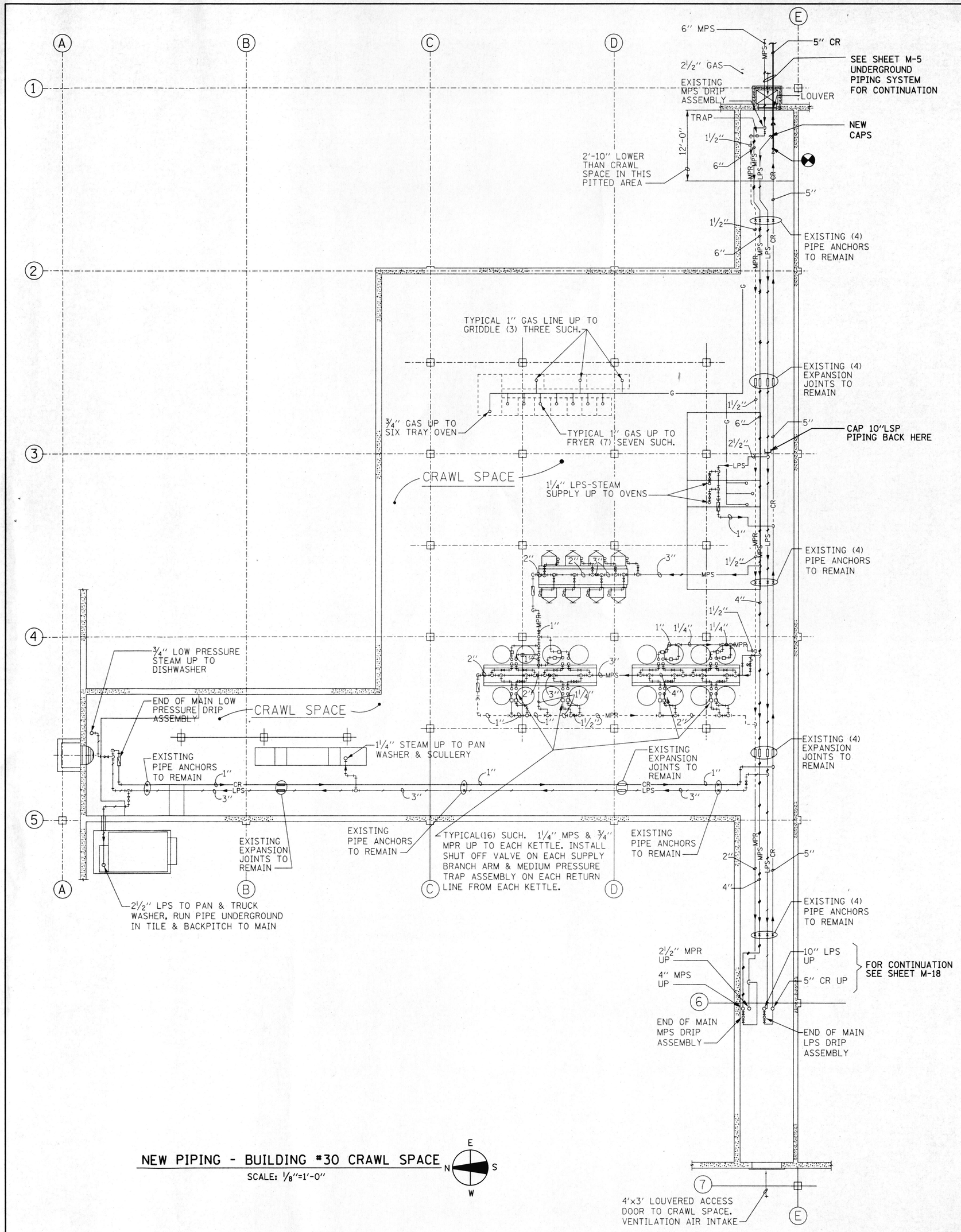

NEW PIPING - BUILDING #30 CRAWL SPACE

SCALE: 1/8"=1'-0"

NOTES:

1. SURVEY ALL EXISTING CONDITIONS AND NOTE THE FULL EXTENT OF RENOVATION REQUIRED, INCLUDING DEMOLITION, TEMPORARY PIPING & EQUIPMENT AND INSTALLATION. CONTRACTOR SHALL FIELD FIT THE INSTALLATION AND SUBMIT SHOP DRAWINGS AND COORDINATION DRAWINGS. THIS DRAWING SHOWS THE GENERAL INTENT.

REFERENCES:

M-1, M-5, M-6, M-15, M-16, M-18

AS BUILT

DATE: FEBRUARY 3, 2003

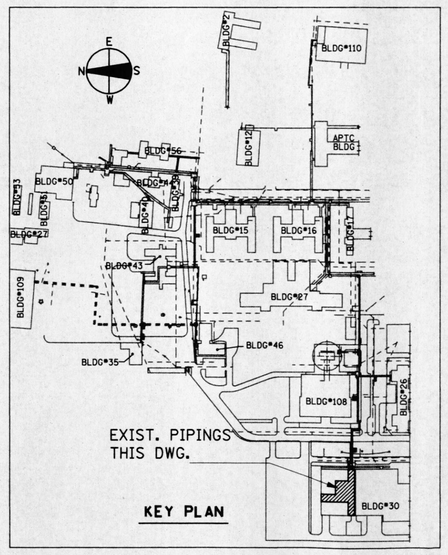

KEY PLAN

REVISIONS			DRAWN	PREPARED	SEAL
NO.	DATE	REMARKS	GGL	APM	ALFREDO P. MANAOIS 052-27858 LICENSED PROFESSIONAL ENGINEER OF ILLINOIS
			TRACED	APPROVED	
			CHECKED APM	APPROVED FRD	11/30/03 2/7/03

STV Incorporated
engineers/architects/planners/scientists/construction managers
70 W. MADISON ST. SUITE 2840 CHICAGO, IL 60602

CAPITAL DEVELOPMENT BOARD

State of Illinois
George H. Ryan, Governor

TUNNEL AND STEAM PIPING RENOVATIONS
NEW PIPING
BUILDING #30 CRAWL SPACE

ELGIN MENTAL HEALTH CENTER
750 SOUTH STATE STREET
ELGIN, ILLINOIS 60123

CDB PROJECT NO: 321-055-097 PH-2
DATE FEBRUARY 3, 2003
SHEET NO: M-17
OF SHEETS

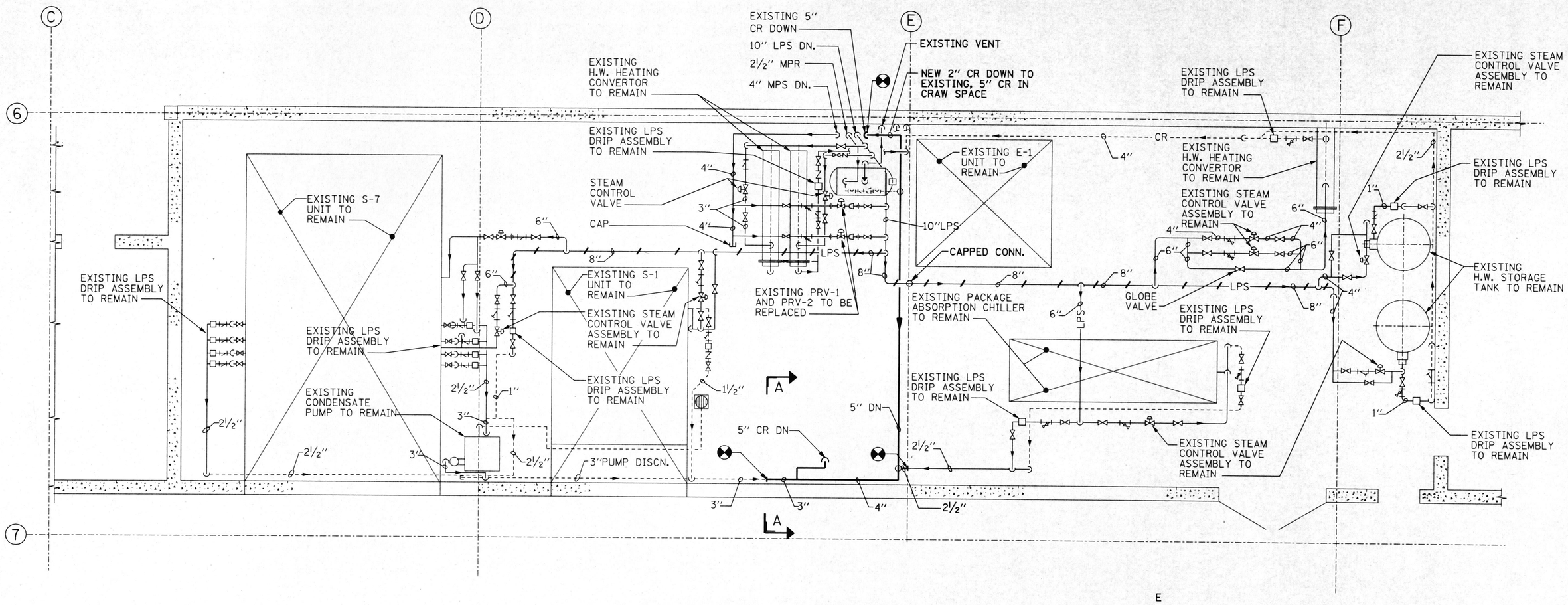

NEW PIPING MECHANICAL EQUIPMENT ROOM PLAN - BUILDING #30

SCALE: 1/4"=1'-0"

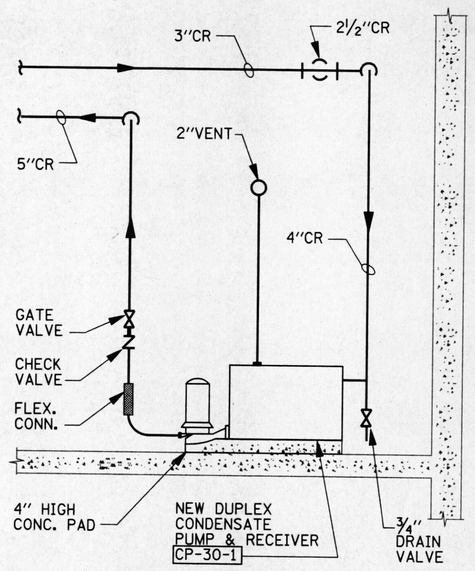

SECTION A-A

SCALE: ¾"=1'-0"

NOTE:

PROVIDE DETAILED SHOP DRAWINGS OF ALL PIPING ARRANGEMENTS FOR APPROVAL BEFORE CONSTRUCTION BEGINS.

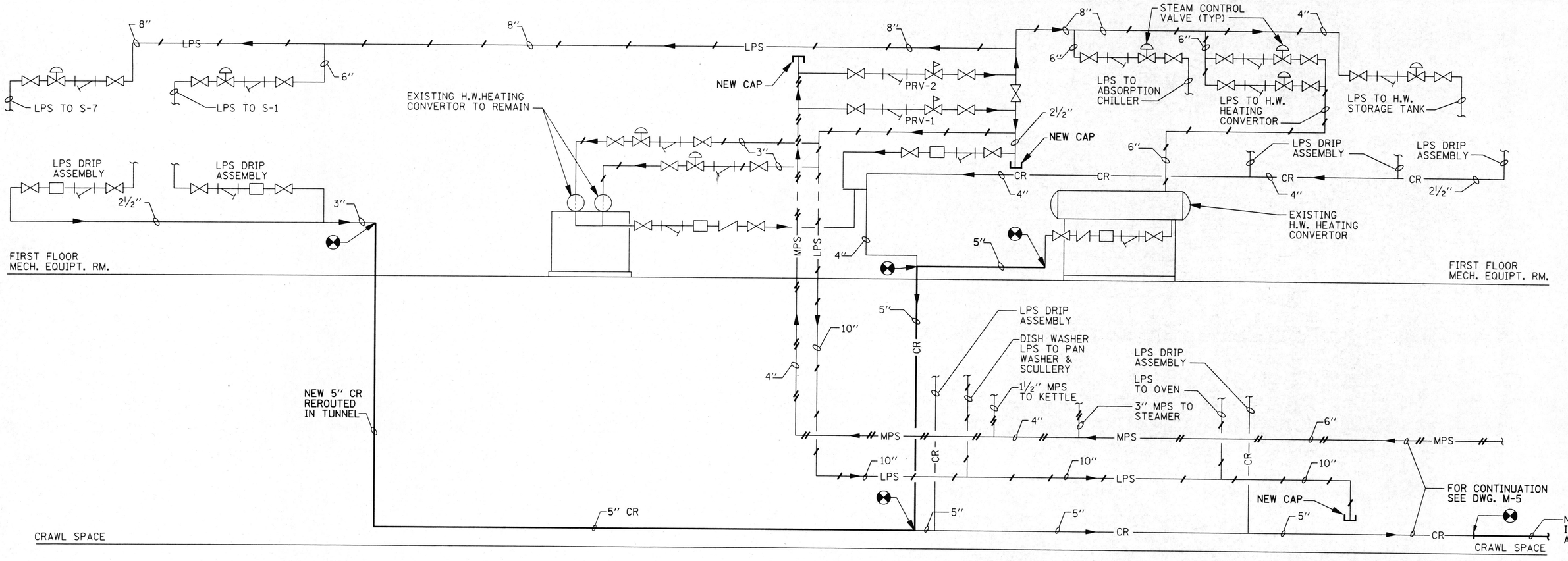

BUILDING #30 - STEAM AND CONDENSATE PIPING DIAGRAM

SCALE: NONE

NOTES:

1. SURVEY ALL EXISTING CONDITIONS AND NOTE THE FULL EXTENT OF RENOVATION REQUIRED, INCLUDING DEMOLITION, TEMPORARY PIPING & EQUIPMENT AND INSTALLATION. CONTRACTOR SHALL FIELD FIT THE INSTALLATION AND SUBMIT SHOP DRAWINGS AND COORDINATION DRAWINGS. THIS DRAWING SHOWS THE GENERAL INTENT.

REFERENCES:

M-15, M-16, M-17

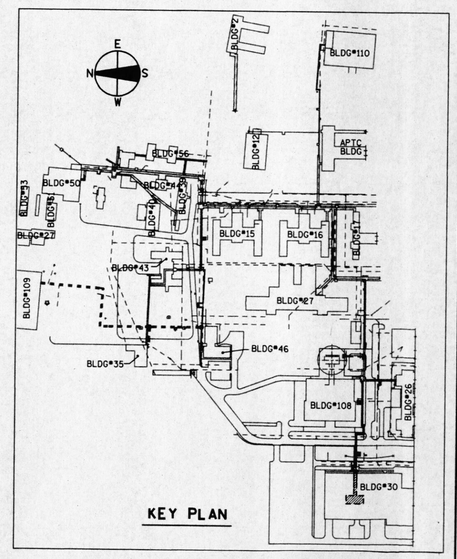

AS BUILT

DATE: FEBRUARY 3, 2003

REVISIONS			DRAWN	PREPARED
NO.	DATE	REMARKS	GGL	APM
			TRACED	APPROVED
			CHECKED	APPROVED
	11-06-02	AS BUILT DRAWING	APM	FRD

SEAL: ARTURO P. MANALO, 062-27858, LICENSED PROFESSIONAL ENGINEER, STATE OF ILLINOIS, 1/30/03, 2/3/03

STV Incorporated
engineers/architects/planners/scientists/construction managers
70 W. MADISON ST. SUITE 2840 CHICAGO, IL 60602

CAPITAL DEVELOPMENT BOARD

State of Illinois
George H. Ryan, Governor

TUNNEL AND STEAM PIPING RENOVATIONS
NEW PIPING AND MECHANICAL EQUIPMENT ROOM PLAN - BUILDING #30

ELGIN MENTAL HEALTH CENTER
750 SOUTH STATE STREET
ELGIN, ILLINOIS 60123

CDB PROJECT NO: 321-055-097 PH-2
DATE: FEBRUARY 3, 2003
SHEET NO: M-18
OF SHEETS

PROJECTS\1642\MECH\M18.dgn 02/03/2003 03:58:08 PM

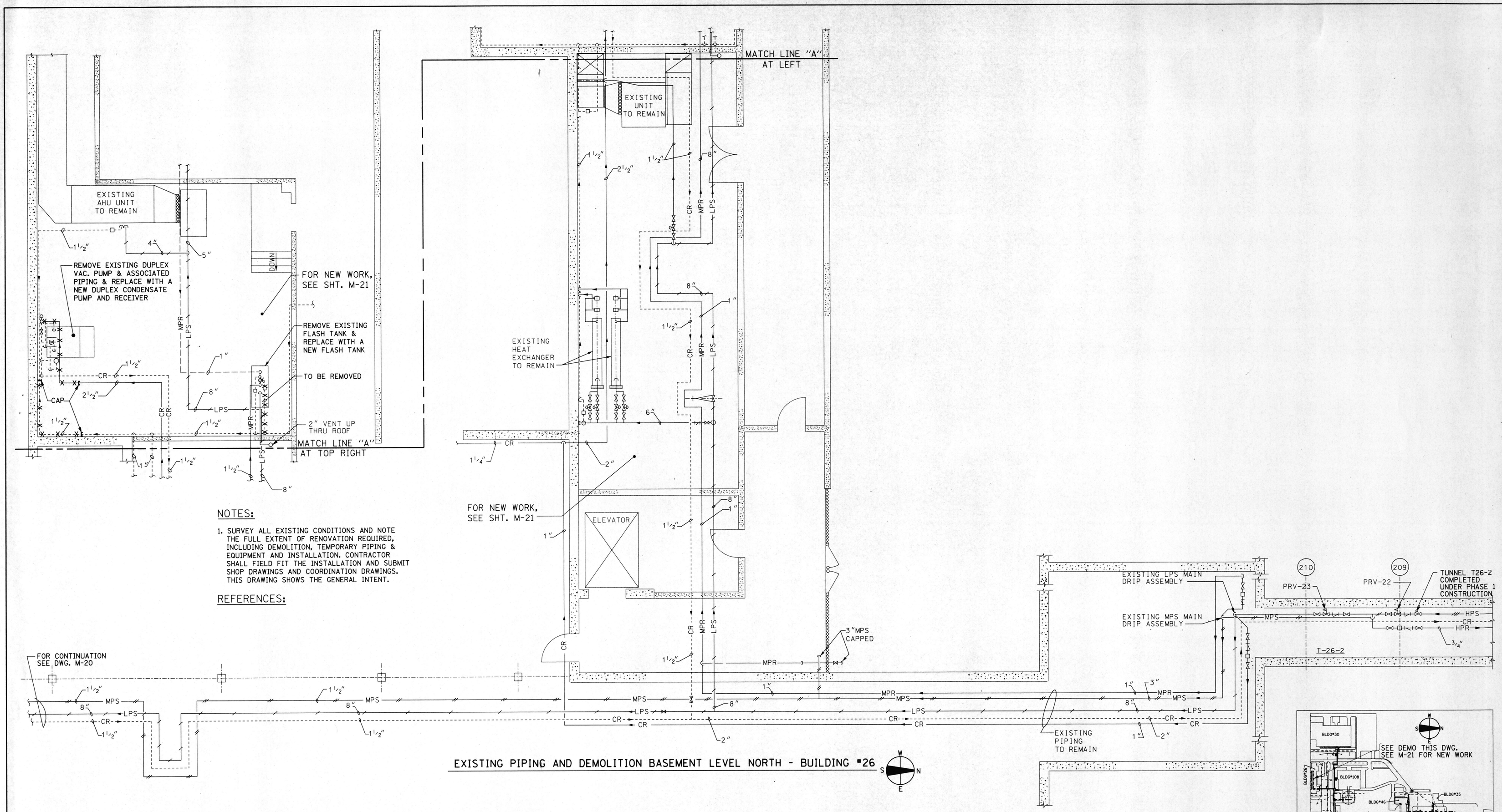

NOTES:

1. SURVEY ALL EXISTING CONDITIONS AND NOTE THE FULL EXTENT OF RENOVATION REQUIRED, INCLUDING DEMOLITION, TEMPORARY PIPING & EQUIPMENT AND INSTALLATION. CONTRACTOR SHALL FIELD FIT THE INSTALLATION AND SUBMIT SHOP DRAWINGS AND COORDINATION DRAWINGS. THIS DRAWING SHOWS THE GENERAL INTENT.

REFERENCES:

EXISTING PIPING AND DEMOLITION BASEMENT LEVEL NORTH - BUILDING #26

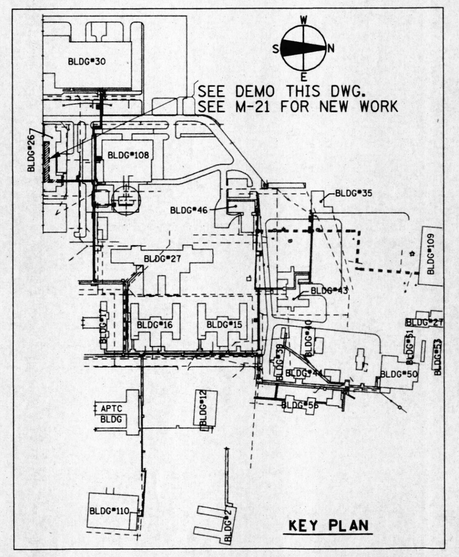

KEY PLAN

AS BUILT

DATE: FEBRUARY 3, 2003

REVISIONS			DRAWN	PREPARED	SEAL
NO.	DATE	REMARKS	GGL	APM	
			TRACED	APPROVED	
			CHECKED	APPROVED	
			APM	FRD	

STV Incorporated
engineers/architects/planners/scientists/construction managers
70 W. MADISON ST. SUITE 2840 CHICAGO, IL 60602

CAPITAL DEVELOPMENT BOARD

State of Illinois
George H. Ryan, Governor

TUNNEL AND STEAM PIPING RENOVATIONS
EXISTING PIPING AND DEMOLITION
BASEMENT LEVEL NORTH - BUILDING #26

ELGIN MENTAL HEALTH CENTER
750 SOUTH STATE STREET
ELGIN, ILLINOIS 60123

CDB PROJECT NO: 321-055-097 PH-2
DATE FEBRUARY 3, 2003
SHEET NO: M-19
OF SHEETS

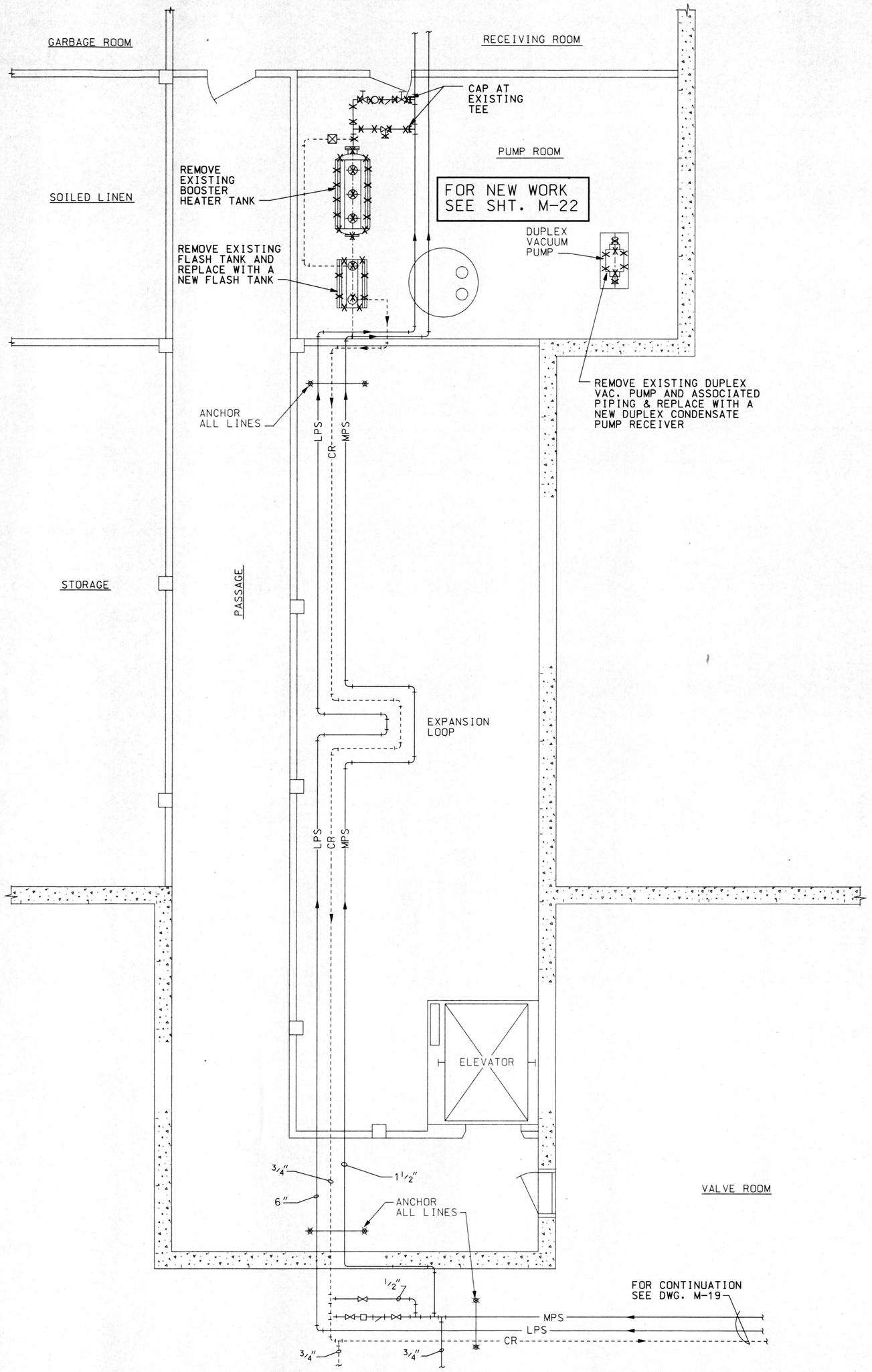

EXISTING PIPING AND DEMOLITION BASEMENT LEVEL SOUTH - BUILDING #26

SCALE:N.T.S.

NOTES:

1. SURVEY ALL EXISTING CONDITIONS AND NOTE THE FULL EXTENT OF RENOVATION REQUIRED, INCLUDING DEMOLITION, TEMPORARY PIPING & EQUIPMENT AND INSTALLATION. CONTRACTOR SHALL FIELD FIT THE INSTALLATION AND SUBMIT SHOP DRAWINGS AND COORDINATION DRAWINGS. THIS DRAWING SHOWS THE GENERAL INTENT.

REFERENCES:

AS BUILT

DATE: FEBRUARY 3, 2003

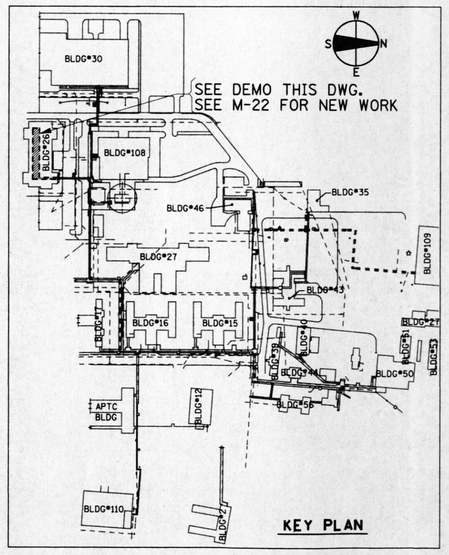

REVISIONS			DRAWN	PREPARED	SEAL
NO.	DATE	REMARKS	GGL	APM	ALFREDO P. MANALO 062-27858 LICENSED PROFESSIONAL ENGINEER ILLINOIS
			TRACED	APPROVED	
			CHECKED APM	APPROVED FRD	

STV Incorporated
engineers/architects/planners/scientists/construction managers
70 W. MADISON ST. SUITE 2840 CHICAGO, IL 60602

CAPITAL DEVELOPMENT BOARD

State of Illinois
George H. Ryan, Governor

TUNNEL AND STEAM PIPING RENOVATIONS
EXISTING PIPING AND DEMOLITION BASEMENT LEVEL SOUTH - BUILDING #26
ELGIN MENTAL HEALTH CENTER
750 SOUTH STATE STREET
ELGIN, ILLINOIS 60123

CDB PROJECT NO: 321-055-097 PH-2
DATE: FEBRUARY 3, 2003
SHEET NO: M-20
OF SHEETS

h:\PROJECTS\1642\MECH\M20.DGN

C:\PROJECTS\1642\MECH\M20.DGN 02/07/2003 03:59:37 PM

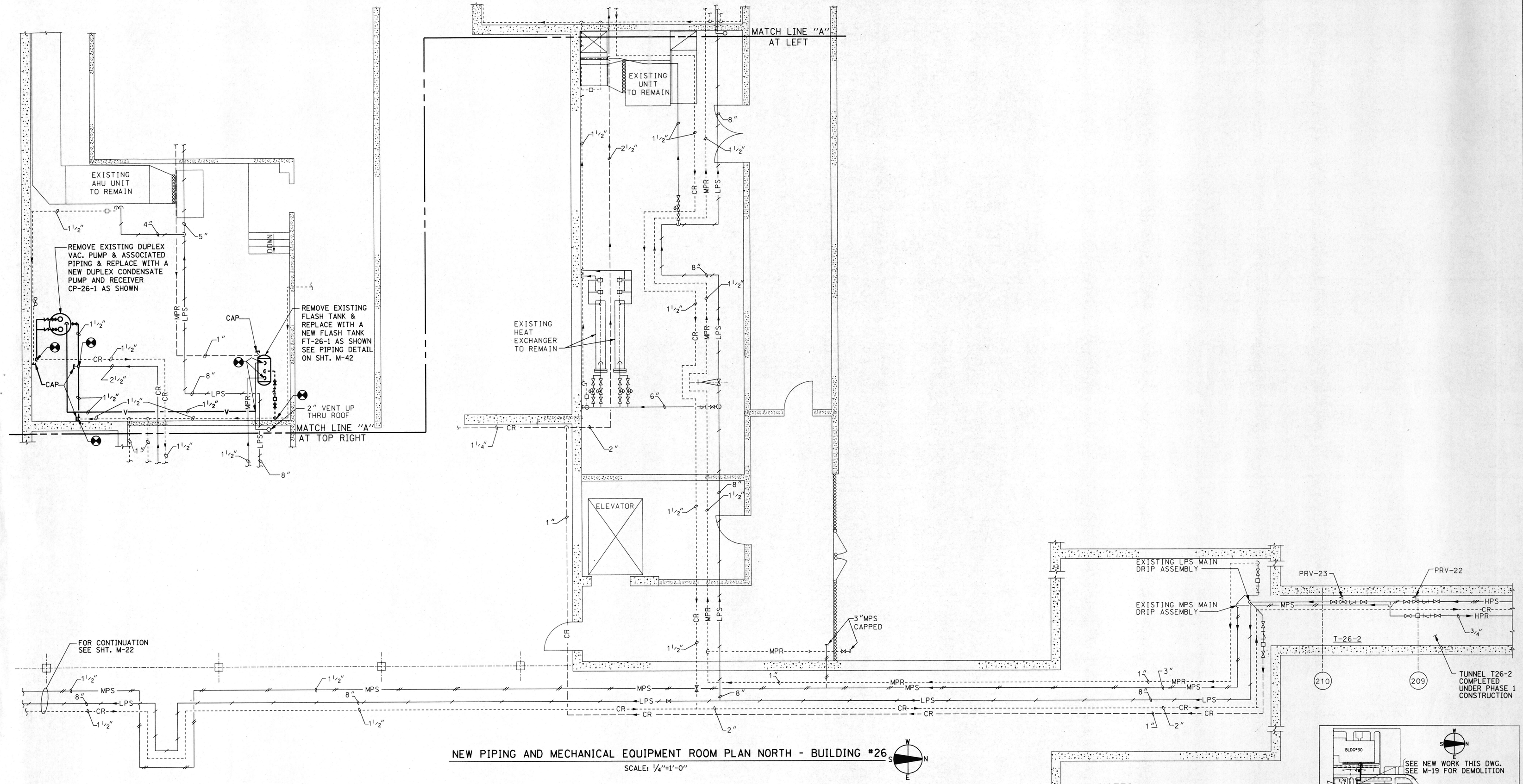

NEW PIPING AND MECHANICAL EQUIPMENT ROOM PLAN NORTH - BUILDING #26

SCALE: 1/4"=1'-0"

NOTES:

1. SURVEY ALL EXISTING CONDITIONS AND NOTE THE FULL EXTENT OF RENOVATION REQUIRED, INCLUDING DEMOLITION, TEMPORARY PIPING & EQUIPMENT AND INSTALLATION. CONTRACTOR SHALL FIELD FIT THE INSTALLATION AND SUBMIT SHOP DRAWINGS AND COORDINATION DRAWINGS. THIS DRAWING SHOWS THE GENERAL INTENT.

REFERENCES:

AS BUILT

DATE: FEBRUARY 3, 2003

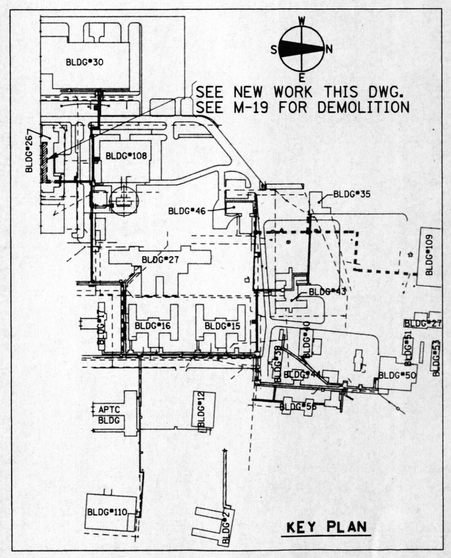

REVISIONS			DRAWN	PREPARED
NO.	DATE	REMARKS	GGL	APM
			TRACED	APPROVED
			CHECKED	APPROVED
			APM	FRD

SEAL: ALFREDO P. MANALO, 052-27363, LICENSED PROFESSIONAL ENGINEER, STATE OF ILLINOIS

STV Incorporated
engineers/architects/planners/scientists/construction managers
70 W. MADISON ST. SUITE 2840 CHICAGO, IL 60602

CAPITAL DEVELOPMENT BOARD

State of Illinois
George H. Ryan, Governor

TUNNEL AND STEAM PIPING RENOVATIONS
NEW PIPING AND MECHANICAL EQUIPMENT ROOM PLAN NORTH - BUILDING #26
ELGIN MENTAL HEALTH CENTER
750 SOUTH STATE STREET
ELGIN, ILLINOIS 60123

CDB PROJECT NO: 321-055-097 PH-2
DATE: FEBRUARY 3, 2003
SHEET NO: M-21
OF SHEETS

I:\PROJECTS\1642\MECH\M2.DGN

D:\PROJECTS\1642\MECH\M21.DGN 02/03/2003 04:12:10 PM

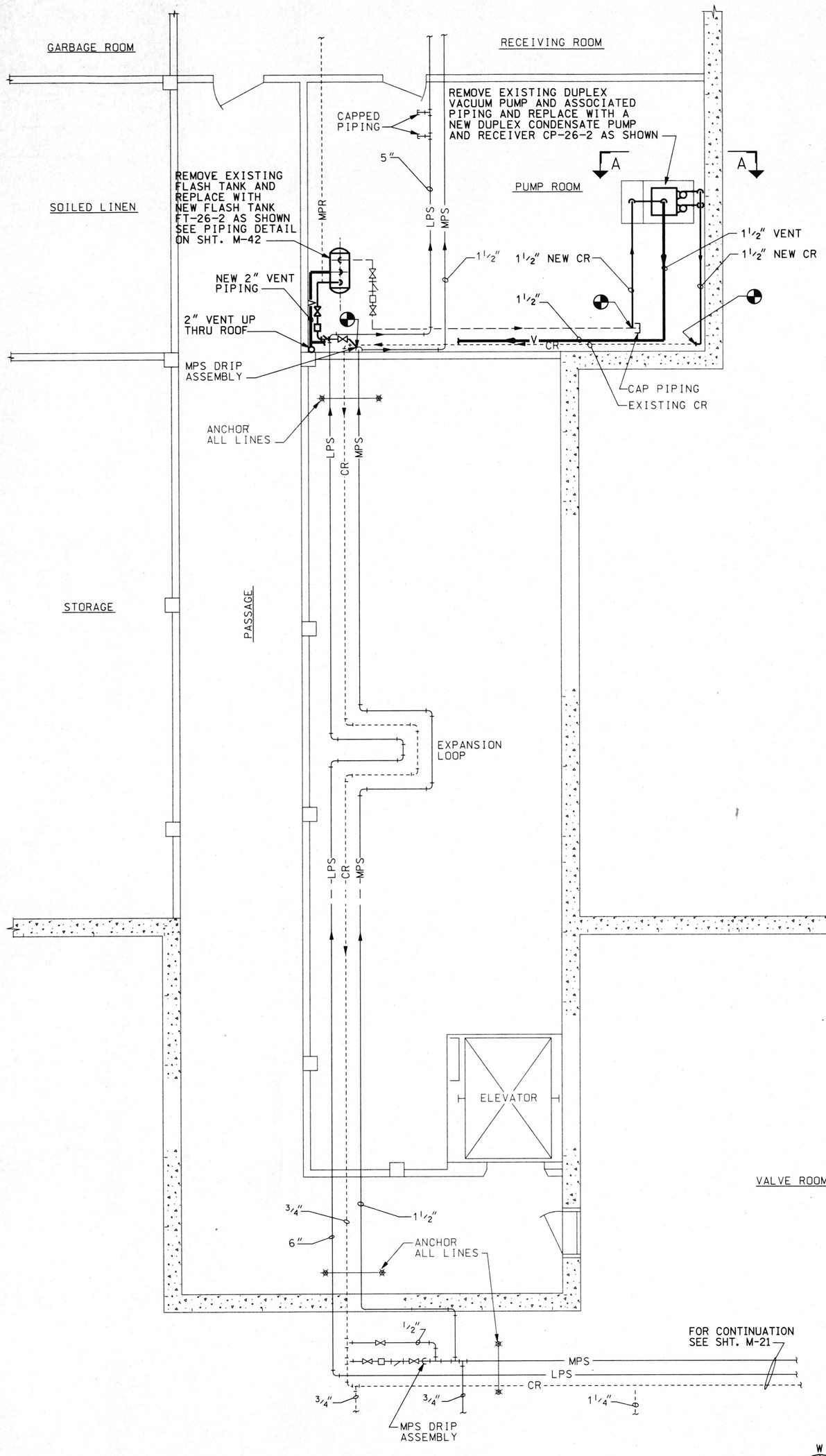

NEW PIPING AND MECHANICAL EQUIPMENT ROOM BASEMENT LEVEL SOUTH - BUILDING #26

SCALE: 1/4"=1'-0"

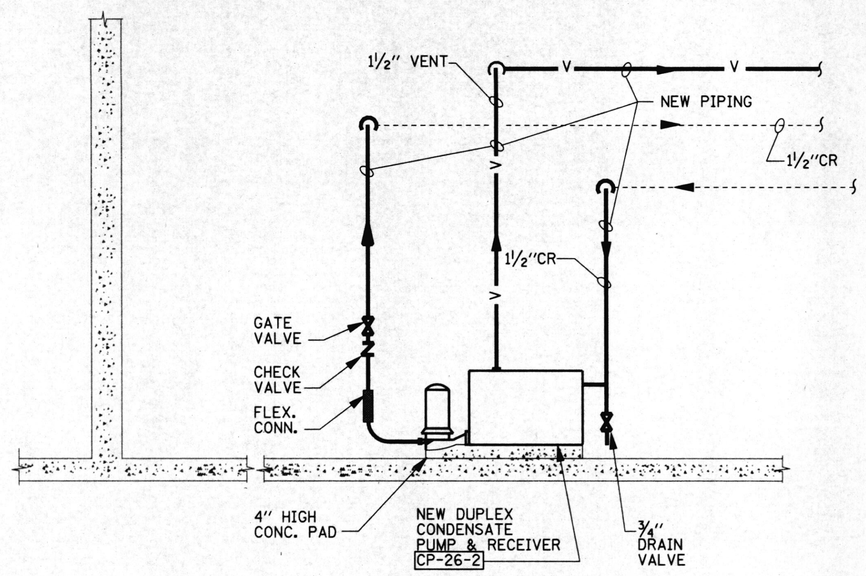

SECTION A-A

SCALE: 3/4"=1'-0"

NOTE:

PROVIDE DETAILED SHOP DRAWINGS OF ALL PIPING ARRANGEMENTS FOR APPROVAL BEFORE CONSTRUCTION BEGINS.

NOTES:

1. SURVEY ALL EXISTING CONDITIONS AND NOTE THE FULL EXTENT OF RENOVATION REQUIRED, INCLUDING DEMOLITION, TEMPORARY PIPING & EQUIPMENT AND INSTALLATION. CONTRACTOR SHALL FIELD FIT THE INSTALLATION AND SUBMIT SHOP DRAWINGS AND COORDINATION DRAWINGS. THIS DRAWING SHOWS THE GENERAL INTENT.

REFERENCES:

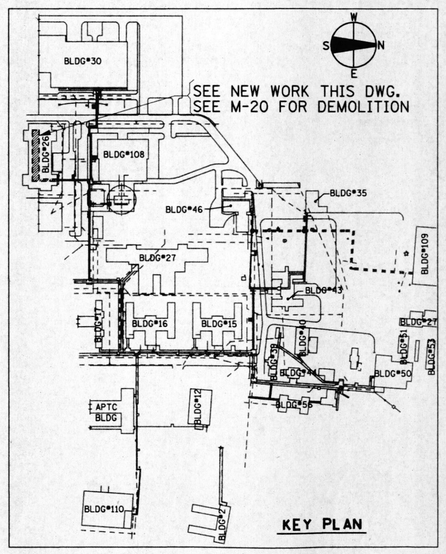

AS BUILT

DATE: FEBRUARY 3, 2003

REVISIONS			DRAWN	PREPARED
NO.	DATE	REMARKS	GGL	APM
			TRACED	APPROVED
			CHECKED	APPROVED
			APM	FRD

SEAL: ARTHUR P. FRANCIS 062-27559 LICENSED PROFESSIONAL ENGINEER ILLINOIS

11/26/02 2/7/03

STV Incorporated
engineers/architects/planners/scientists/construction managers
70 W. MADISON ST. SUITE 2840 CHICAGO, IL 60602

CAPITAL DEVELOPMENT BOARD

State of Illinois
George H. Ryan, Governor

TUNNEL AND STEAM PIPING RENOVATIONS
NEW PIPING AND MECHANICAL EQUIPMENT ROOM BASEMENT LEVEL SOUTH - BUILDING #26

ELGIN MENTAL HEALTH CENTER
750 SOUTH STATE STREET
ELGIN, ILLINOIS 60123

CDB PROJECT NO: 321-055-097 PH-2
DATE: FEBRUARY 3, 2003
SHEET NO: M-22
OF SHEETS

PROJECTS\TEAM\MECH\M22.DGN 12/03/2003 04:14:01 PM

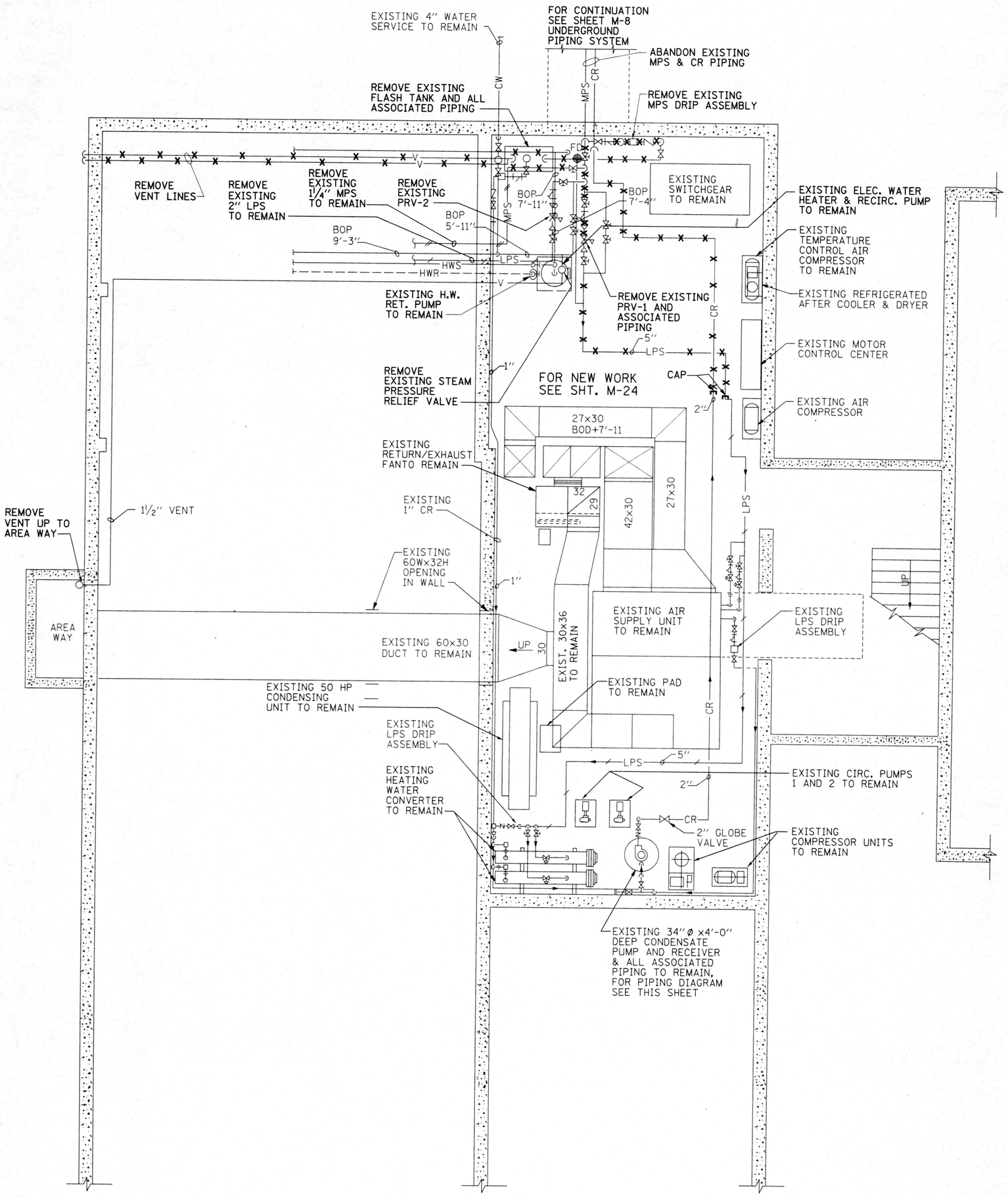

EXISTING PIPING AND DEMOLITION - BUILDING #46

SCALE: ¼"=1'-0"

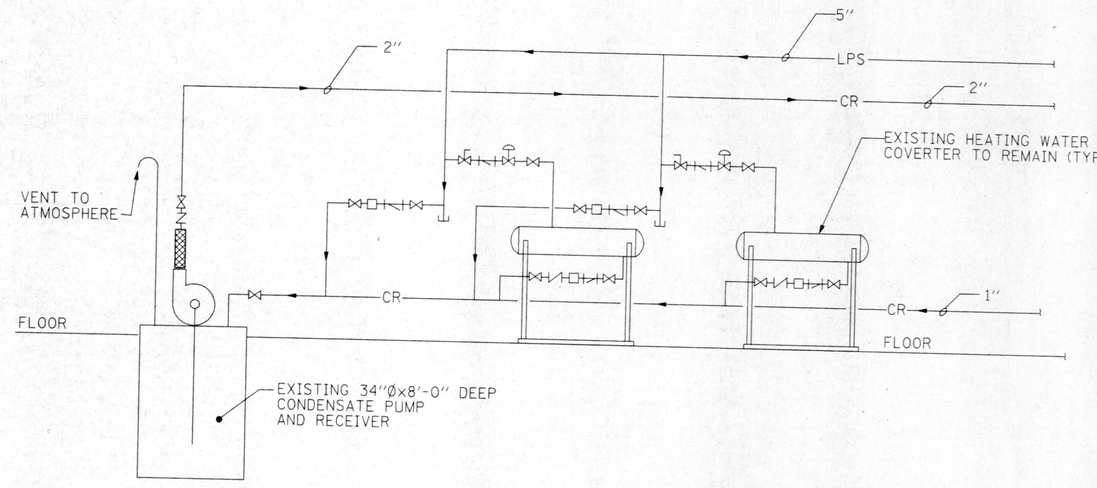

BUILDING #46 - EXISTING STEAM AND CONDENSATE PIPING DIAGRAM

NO SCALE

NOTES:

1. SURVEY ALL EXISTING CONDITIONS AND NOTE THE FULL EXTENT OF RENOVATION REQUIRED, INCLUDING DEMOLITION, TEMPORARY PIPING & EQUIPMENT AND INSTALLATION. CONTRACTOR SHALL FIELD FIT THE INSTALLATION AND SUBMIT SHOP DRAWINGS AND COORDINATION DRAWINGS. THIS DRAWING SHOWS THE GENERAL INTENT.

REFERENCES:

M-7, M-8, M-24

AS BUILT

DATE: FEBRUARY 3, 2003

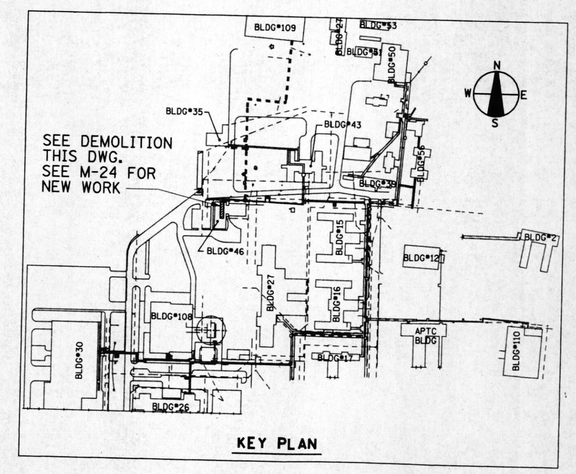

KEY PLAN

REVISIONS			DRAWN	PREPARED	SEAL
NO.	DATE	REMARKS	GGL	APM	
			TRACED	APPROVED	
			CHECKED	APPROVED	
			APM	FRD	

STV Incorporated
engineers/architects/planners/scientists/construction managers
70 W. MADISON ST. SUITE 2840 CHICAGO, IL 60602

CAPITAL DEVELOPMENT BOARD

State of Illinois
George H. Ryan, Governor

TUNNEL AND STEAM PIPING RENOVATIONS
EXISTING PIPING & DEMOLITION
BUILDING #46

ELGIN MENTAL HEALTH CENTER
750 SOUTH STATE STREET
ELGIN, ILLINOIS 60123

CDB PROJECT NO: 321-055-097 PH-2
DATE FEBRUARY 3, 2003
SHEET NO: M-23
OF SHEETS

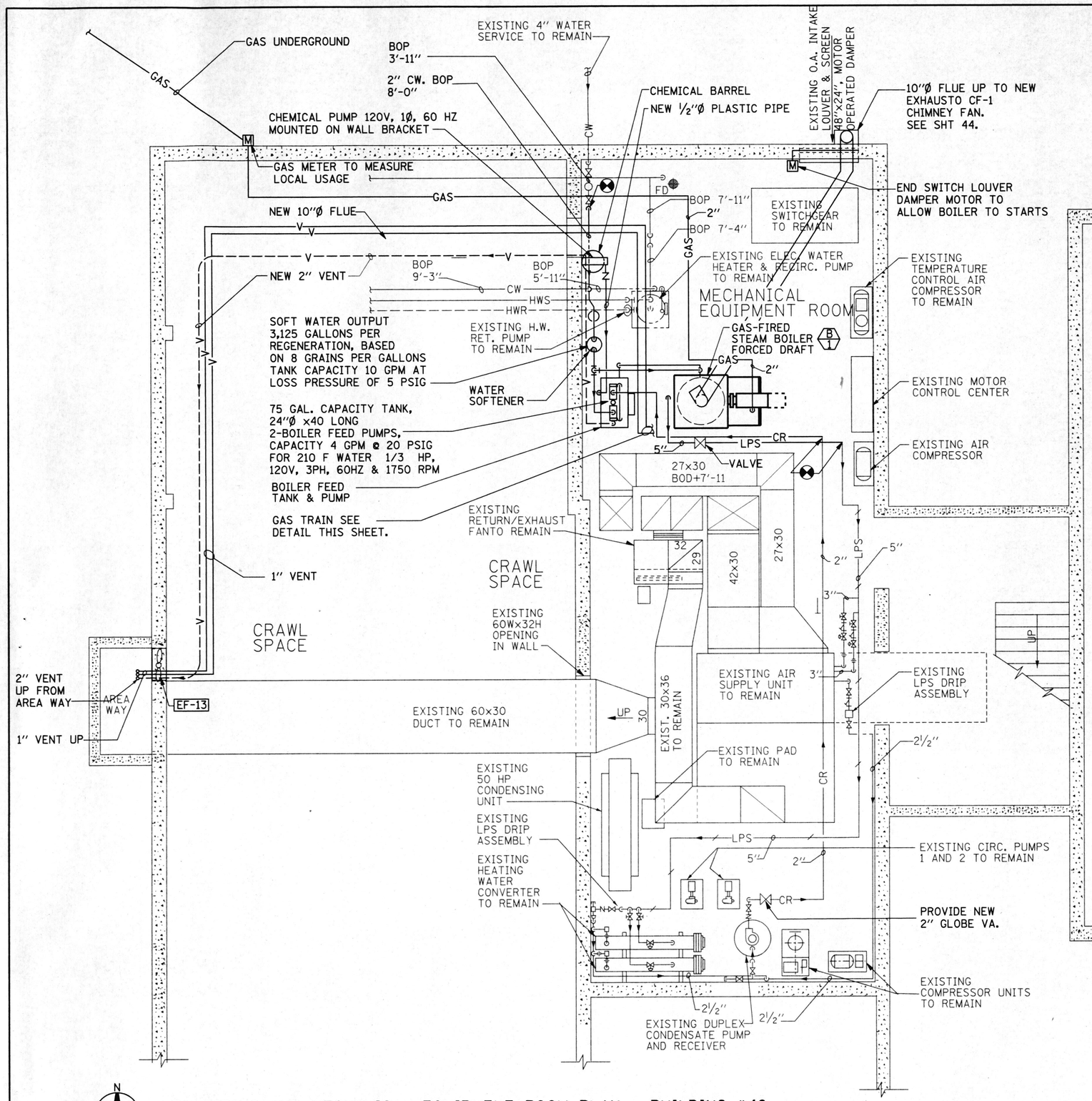

NEW PIPING AND MECHANICAL EQUIPMENT ROOM PLAN - BUILDING #46

SCALE: 1/4"=1'-0"

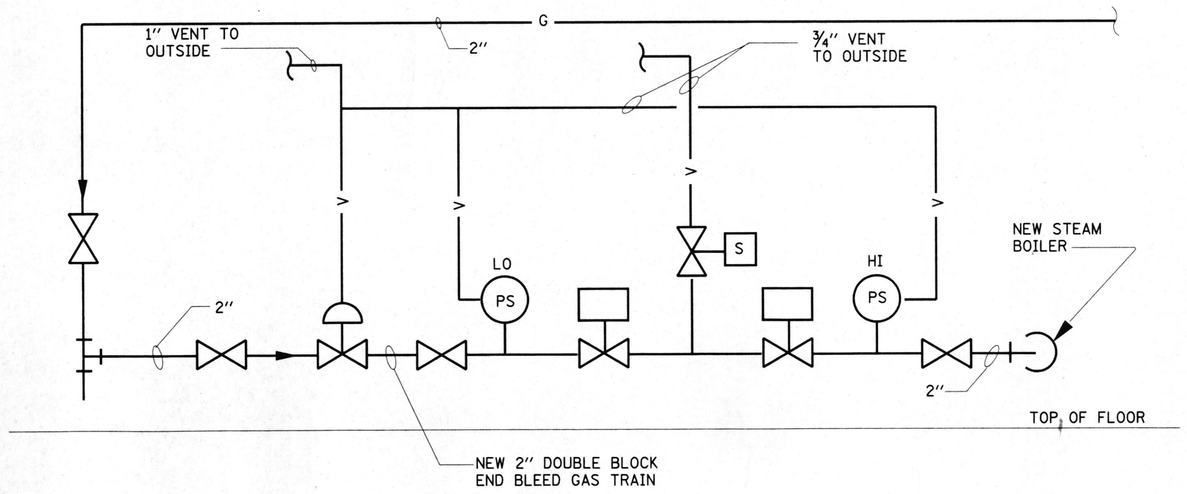

VIEW A-A OF GAS TRAIN

NO SCALE

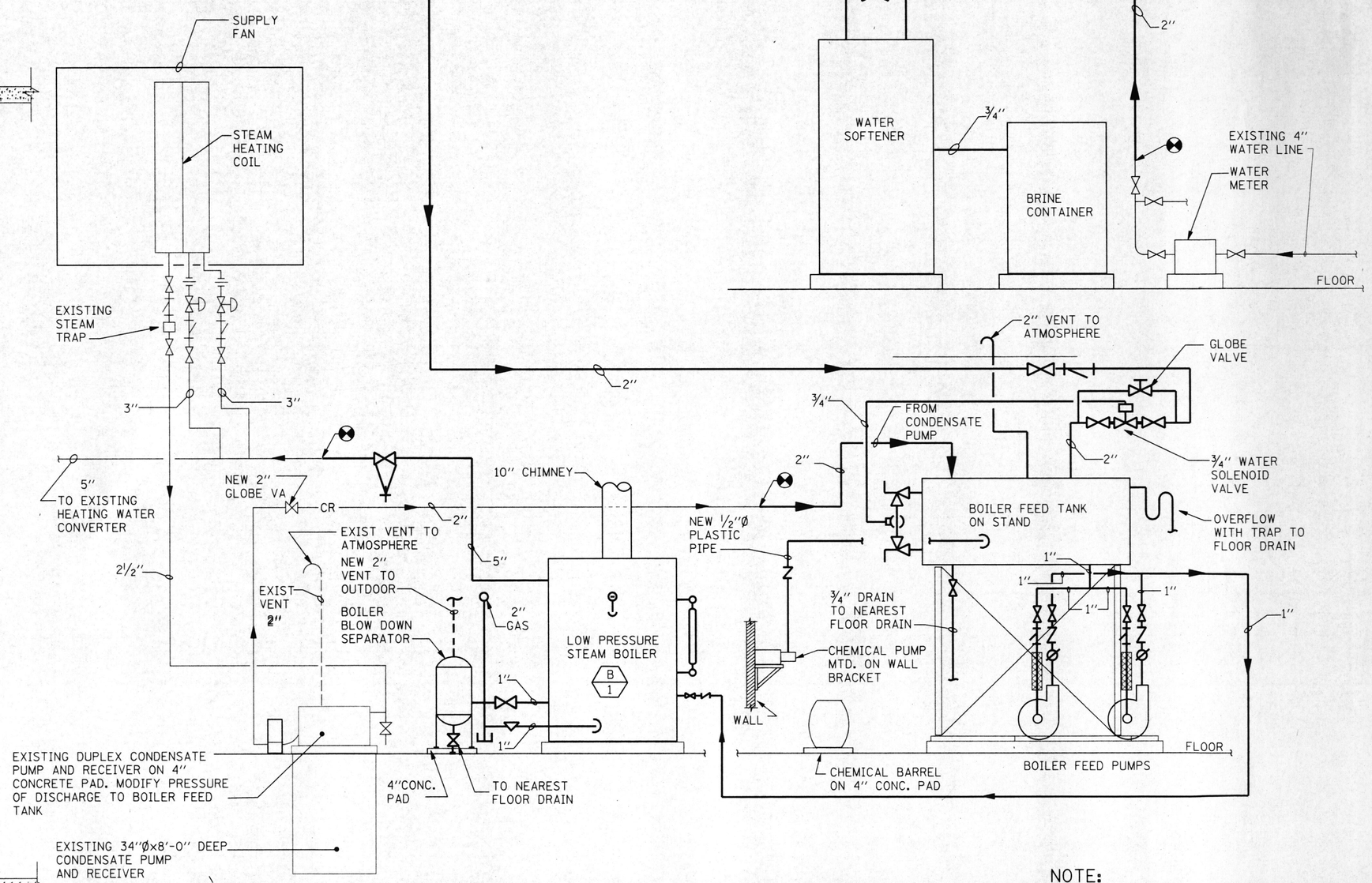

BUILDING #46 - NEW STEAM AND CONDENSATE FLOW DIAGRAM

SCALE: NONE

NOTE:

1. FOR GENERAL NOTES ,SEE SHEET M-1
2. FOR EQUIPMINT SCHDULES SEE SHEET M-44.

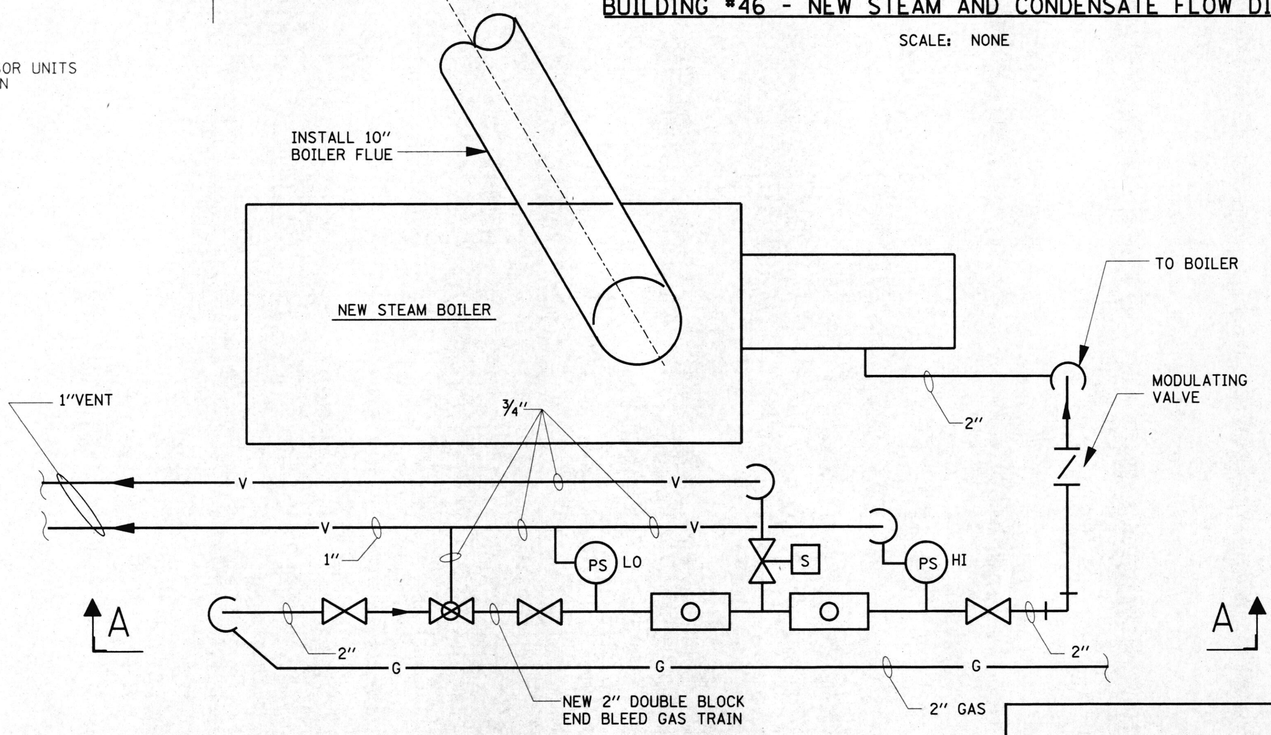

NEW GAS TRAIN DIAGRAM

NO SCALE

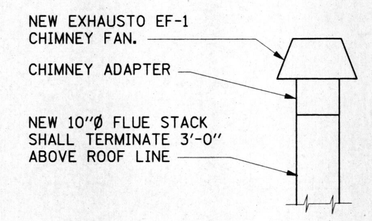

DETAIL 1 (CHIMNEY FAN)

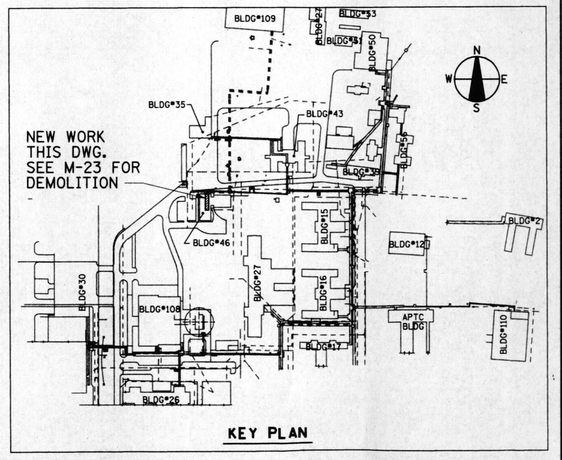

KEY PLAN

AS BUILT

DATE: FEBRUARY 3, 2003

REVISIONS			DRAWN	PREPARED
NO.	DATE	REMARKS	GGL	APM
			TRACED	APPROVED
	11-06-02	AS BUILT DRAWING	CHECKED APM	APPROVED FRD

SEAL: ALFREDO F. MANNO, 062-27658, LICENSED PROFESSIONAL ENGINEER, ILLINOIS, 11/26/03

STV Incorporated
engineers/architects/planners/scientists/construction managers
70 W. MADISON ST. SUITE 2840 CHICAGO, IL 60602

CAPITAL DEVELOPMENT BOARD

State of Illinois
George H. Ryan, Governor

TUNNEL AND STEAM PIPING RENOVATIONS
NEW PIPING & MECHANICAL EQUIPMENT ROOM PLAN - BUILDING #46

ELGIN MENTAL HEALTH CENTER
750 SOUTH STATE STREET
ELGIN, ILLINOIS 60123

CDB PROJECT NO: 321-055-097 PH-2
DATE: FEBRUARY 3, 2003
SHEET NO: M-24
OF SHEETS

PROJECTS\1642\MECH\M24.dgn 02/03/2003 04:24:34 PM

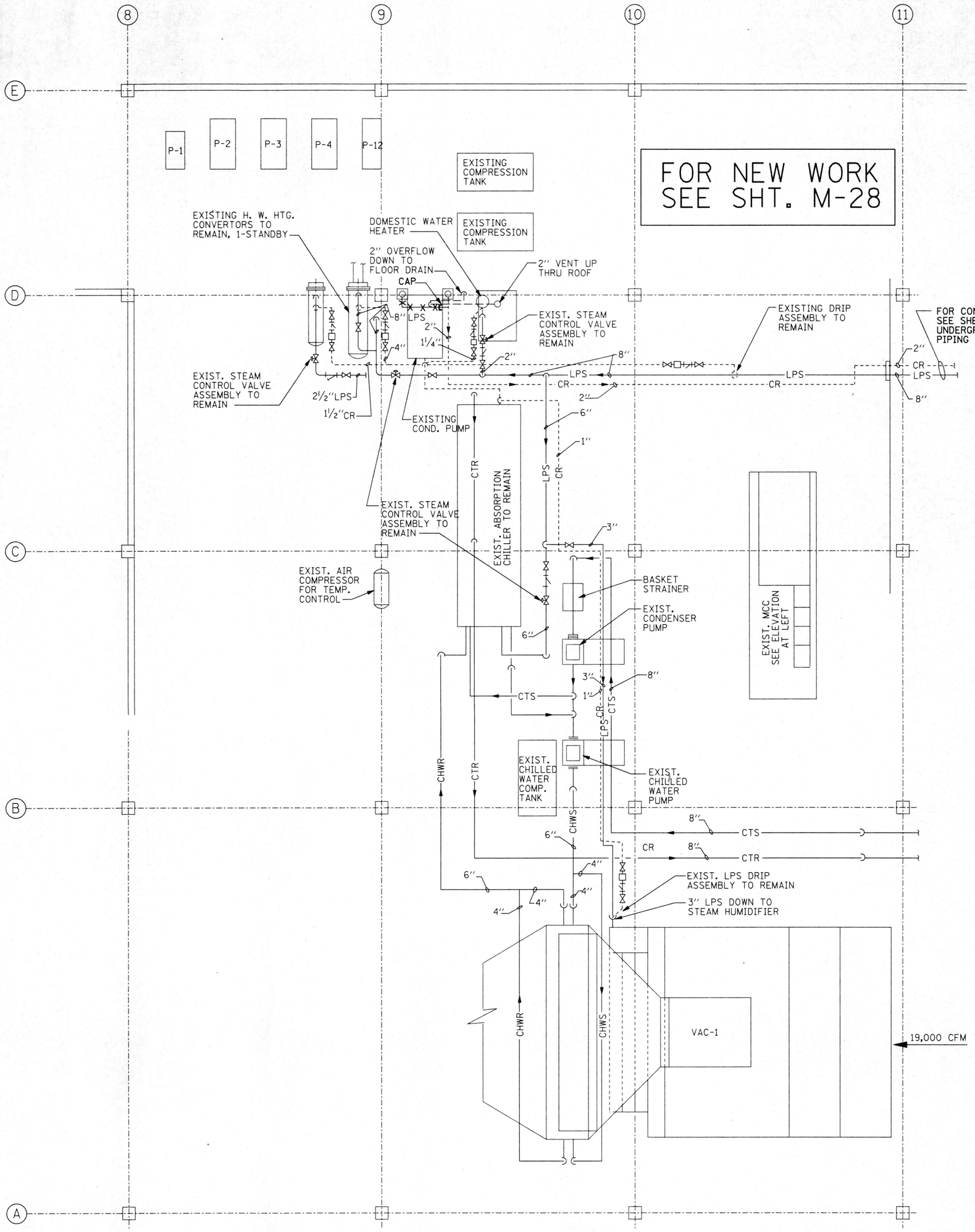

EXISTING PIPING AND DEMOLITION - BUILDING #110

SCALE: 1/4"=1'-0"

COMPRESSOR	CIRC. PUMP #2 (REHEAT)	RET. FAN
	COND. PUMP	SPARE
	TEMPERATURE CONTROL AIR COMPRESSOR	LIGHTING PANEL No.5
AIR COMPRESSOR	BILGE PUMP	
CIRC. PUMP #1 (RADIANT)	AIR SUPPLY FAN	

ELEVATION - MOTOR CONTROL CENTER

SCALE: 3/4"=1'-0"

AS BUILT

DATE: FEBRUARY 3, 2003

NOTES:

1. SURVEY ALL EXISTING CONDITIONS AND NOTE THE FULL EXTENT OF RENOVATION REQUIRED, INCLUDING DEMOLITION, TEMPORARY PIPING & EQUIPMENT AND INSTALLATION. CONTRACTOR SHALL FIELD FIT THE INSTALLATION AND SUBMIT SHOP DRAWINGS AND COORDINATION DRAWINGS. THIS DRAWING SHOWS THE GENERAL INTENT.

REFERENCES:

G-3

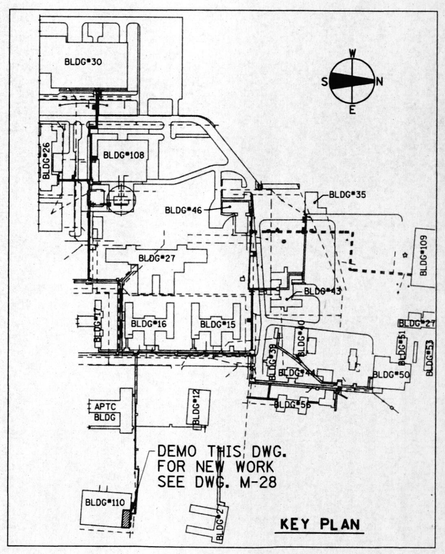

KEY PLAN

REVISIONS			DRAWN	PREPARED	SEAL
NO.	DATE	REMARKS	GGL	APM	
			TRACED	APPROVED	
			CHECKED	APPROVED	
			APM	FRD	

STV Incorporated
engineers/architects/planners/scientists/construction managers
70 W. MADISON ST. SUITE 2840 CHICAGO, IL 60602

CAPITAL DEVELOPMENT BOARD

State of Illinois
George H. Ryan, Governor

TUNNEL AND STEAM PIPING RENOVATIONS
EXISTING PIPING AND DEMOLITION
BUILDING #110 EQUIPMENT ROOM

ELGIN MENTAL HEALTH CENTER
750 SOUTH STATE STREET
ELGIN, ILLINOIS 60123

CDB PROJECT NO: 321-055-097 PH-2
DATE FEBRUARY 3, 2003
SHEET NO: M-27
OF SHEETS

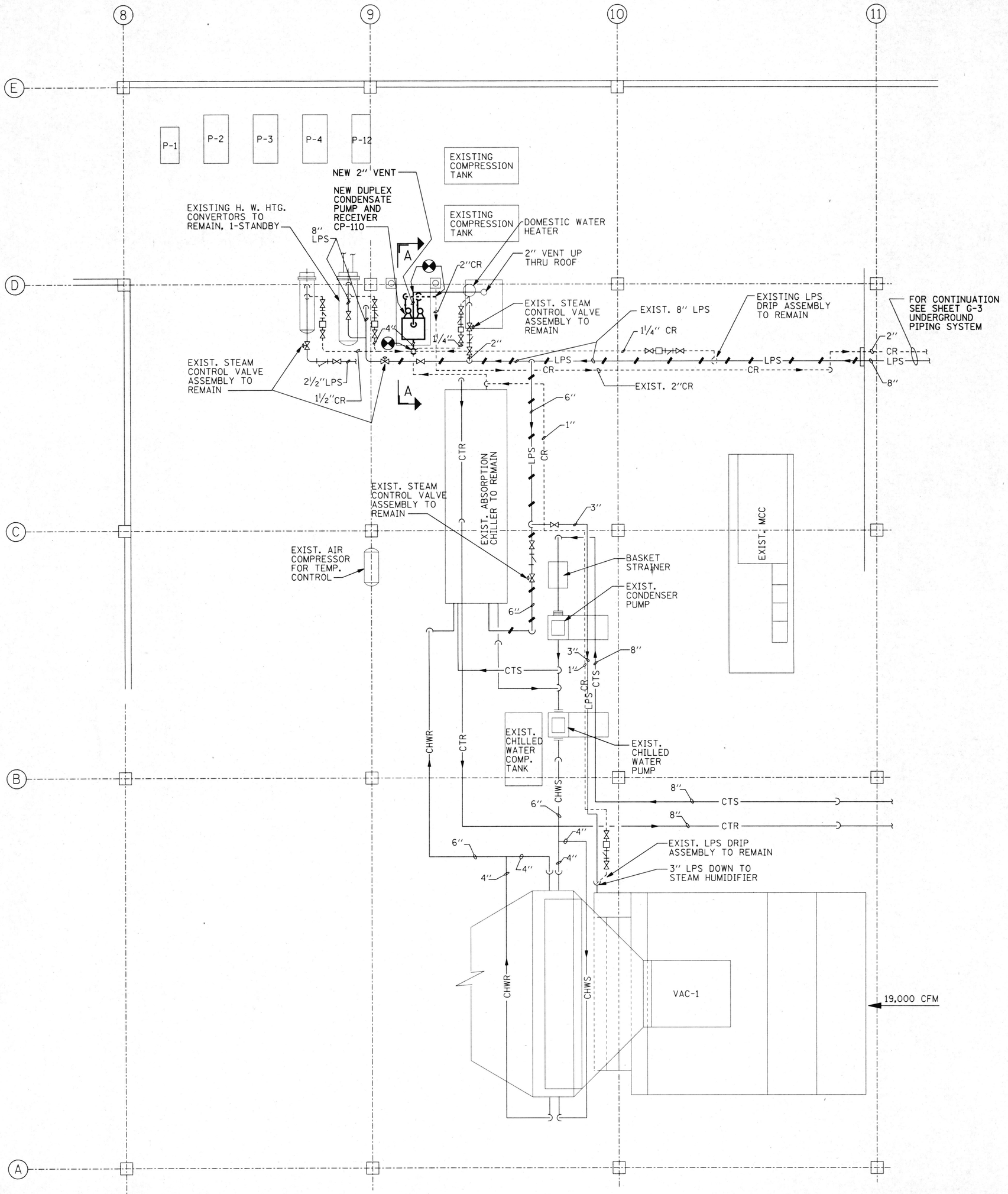

NEW PIPING AND EQUIPMENT ROOM FLOOR PLAN-BUILDING #110

SCALE: ¼"=1'-0"

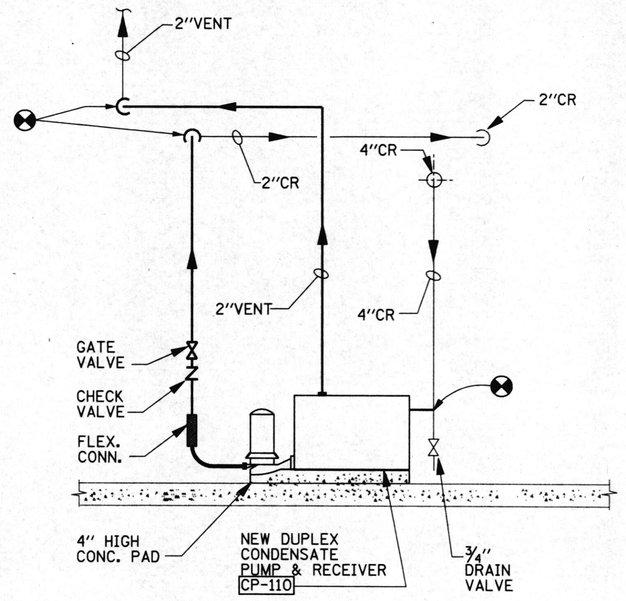

SECTION A-A

SCALE: N.T.S.

NOTE:

PROVIDE DETAILED SHOP DRAWINGS OF ALL PIPING ARRANGEMENTS FOR APPROVAL BEFORE CONSTRUCTION BEGINS.

NOTES:

1. SURVEY ALL EXISTING CONDITIONS AND NOTE THE FULL EXTENT OF RENOVATION REQUIRED, INCLUDING DEMOLITION, TEMPORARY PIPING & EQUIPMENT AND INSTALLATION. CONTRACTOR SHALL FIELD FIT THE INSTALLATION AND SUBMIT SHOP DRAWINGS AND COORDINATION DRAWINGS. THIS DRAWING SHOWS THE GENERAL INTENT.

REFERENCES:

G-3, M-27

AS BUILT

DATE: FEBRUARY 3, 2003

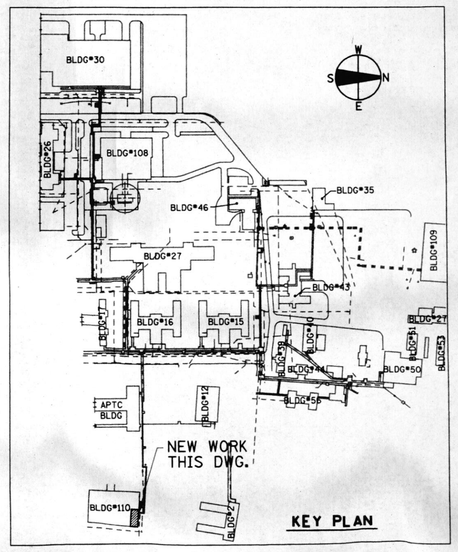

KEY PLAN

REVISIONS			DRAWN	PREPARED	SEAL
NO.	DATE	REMARKS	GGL	APM	ALFREDO P. MANAOIS 062-27858 LICENSED PROFESSIONAL ENGINEER
			TRACED	APPROVED	
			CHECKED APM	APPROVED FRD	11/30/03 2/7/03

STV Incorporated
engineers/architects/planners/scientists/construction managers
70 W. MADISON ST. SUITE 2840 CHICAGO, IL 60602

CAPITAL DEVELOPMENT BOARD

State of Illinois
George H. Ryan, Governor

TUNNEL AND STEAM PIPING RENOVATIONS
NEW PIPING AND MECHANICAL EQUIPMENT
ROOM PLAN-BUILDING #110

ELGIN MENTAL HEALTH CENTER
750 SOUTH STATE STREET
ELGIN, ILLINOIS 60123

CDB PROJECT NO: 321-055-097 PH-2
DATE FEBRUARY 3, 2003
SHEET NO: M-28
OF SHEETS

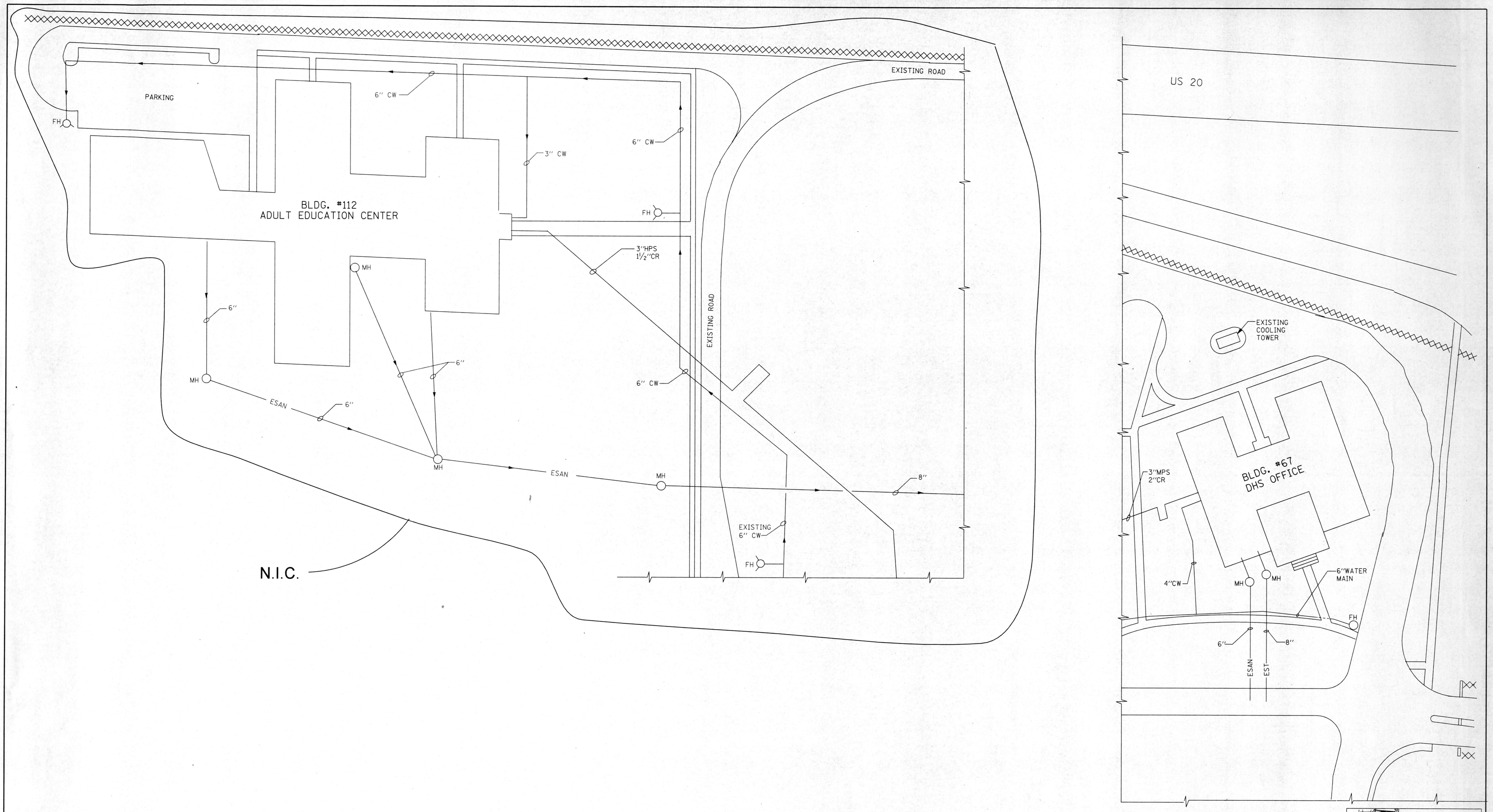

PARTIAL SITE PLAN - NORTH SECTION

SCALE: 1"=30'-0"

REFERENCES:

G-4, M-30, M-36

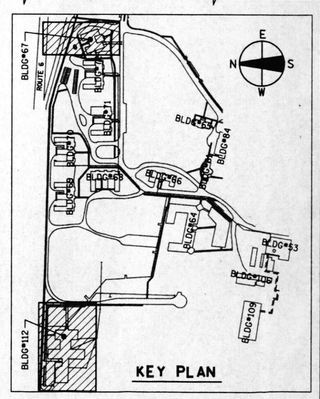

AS BUILT

DATE: FEBRUARY 3, 2003

REVISIONS			DRAWN	PREPARED	SEAL
NO.	DATE	REMARKS	GGL	APM	
			TRACED	APPROVED	
			CHECKED	APPROVED	
			APM	FRD	

STV Incorporated
engineers/architects/planners/scientists/construction managers
70 W. MADISON ST. SUITE 2840 CHICAGO, IL 60602

CAPITAL DEVELOPMENT BOARD

State of Illinois
George H. Ryan, Governor

TUNNEL AND STEAM PIPING RENOVATIONS
PARTIAL SITE PLAN - NORTH SECTION

ELGIN MENTAL HEALTH CENTER
750 SOUTH STATE STREET
ELGIN, ILLINOIS 60123

CDB PROJECT NO: 321-055-097 PH-2
DATE FEBRUARY 3, 2003
SHEET NO: M-29
OF SHEETS

I:\PROJECTS\1642\MECH\M29.DGN

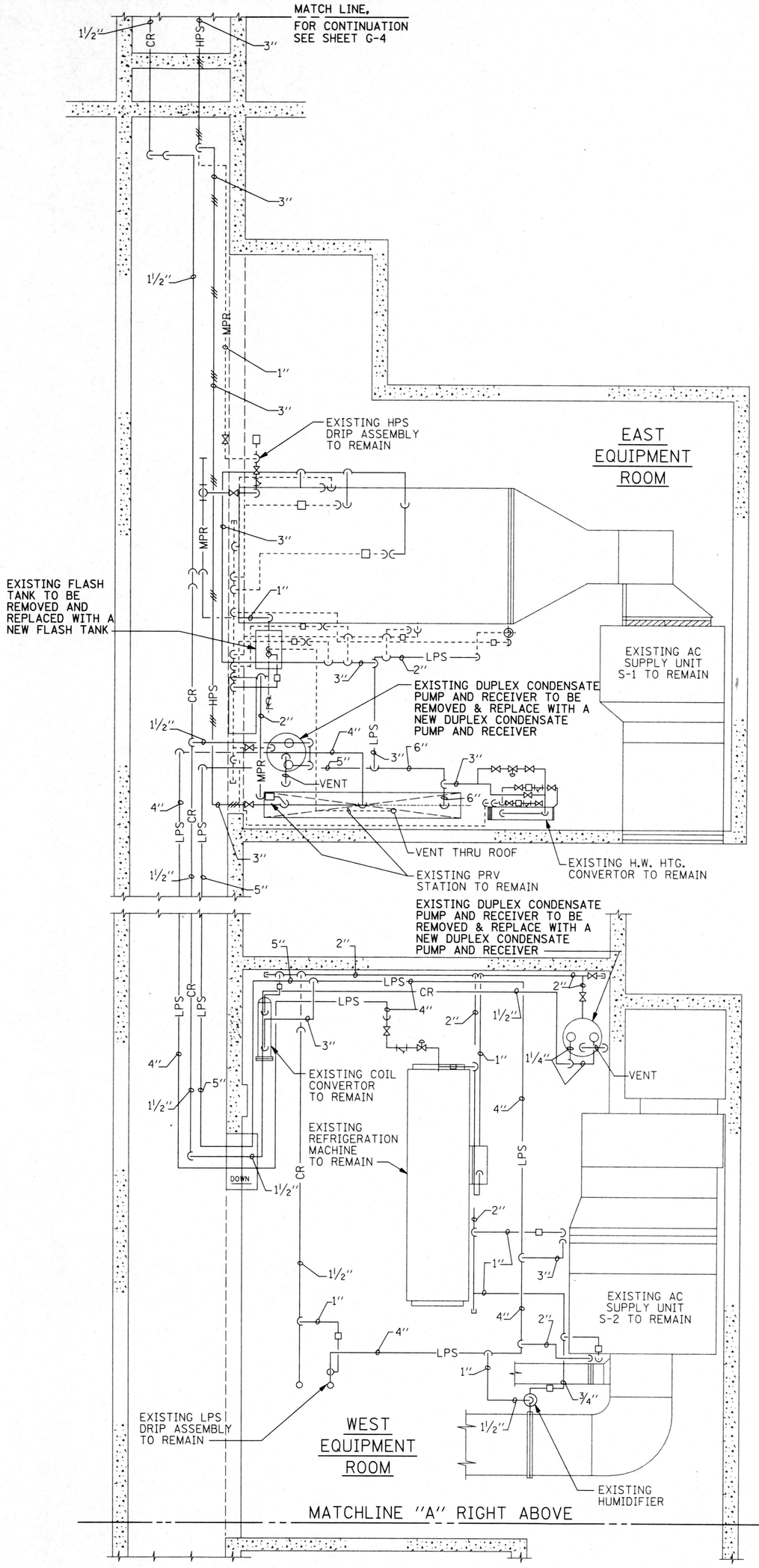

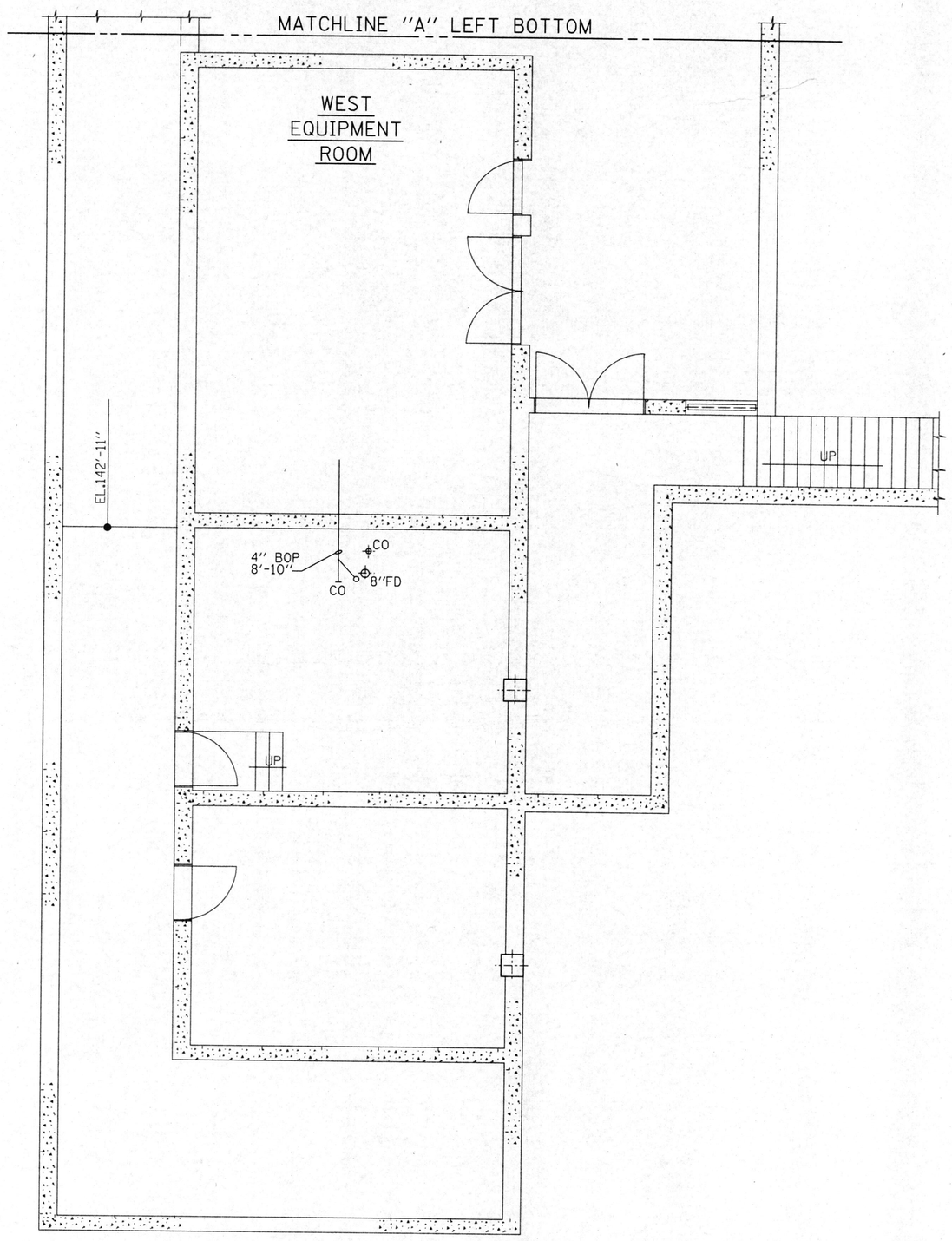

BUILDING #112 EQUIPMENT ROOM FLOOR PLAN
SCALE: 1/4"=1'-0"

AS BUILT
DATE: FEBRUARY 3, 2003

NOTES:

1. SURVEY ALL EXISTING CONDITIONS AND NOTE THE FULL EXTENT OF RENOVATION REQUIRED, INCLUDING DEMOLITION, TEMPORARY PIPING & EQUIPMENT AND INSTALLATION. CONTRACTOR SHALL FIELD FIT THE INSTALLATION AND SUBMIT SHOP DRAWINGS AND COORDINATION DRAWINGS. THIS DRAWING SHOWS THE GENERAL INTENT.

REFERENCES:

G-4, M-29, M-31

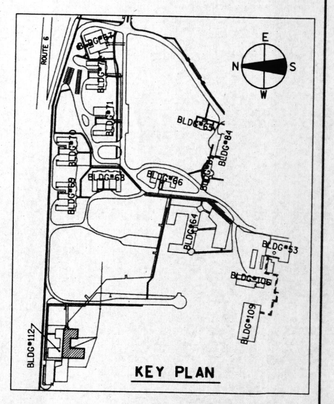

REVISIONS			DRAWN	PREPARED
NO.	DATE	REMARKS	GGL	APM
			TRACED	APPROVED
			CHECKED	APPROVED
			APM	FRD

SEAL: ALFREDO P. RAMOS 082-27550 LICENSED PROFESSIONAL ENGINEER

STV Incorporated
engineers/architects/planners/scientists/construction managers
70 W. MADISON ST. SUITE 2840 CHICAGO, IL 60602

CAPITAL DEVELOPMENT BOARD

State of Illinois
George H. Ryan, Governor

TUNNEL AND STEAM PIPING RENOVATIONS
EXISTING PIPING & DEMOLITION
BUILDING #112 EQUIPMENT ROOM

ELGIN MENTAL HEALTH CENTER
750 SOUTH STATE STREET
ELGIN, ILLINOIS 60123

CDB PROJECT NO: 321-055-097 PH-2
DATE: FEBRUARY 3, 2003
SHEET NO: M-30
OF SHEETS

\PROJECTS\1642\MECH\M30.DGN 02/03/2003 04:48:45 PM

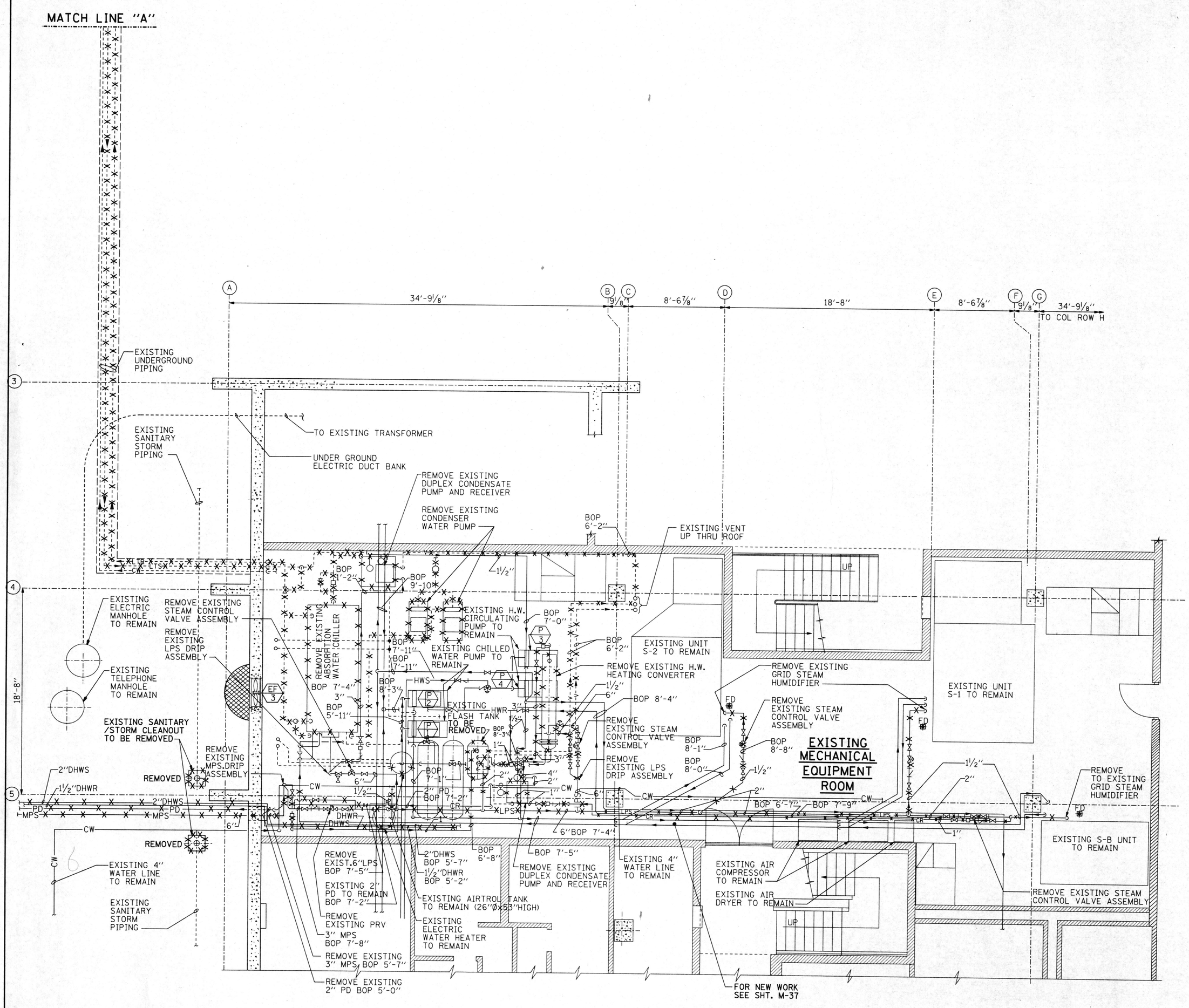

EXISTING PIPING AND DEMOLITION - BUILDING #67 EQUIPMENT ROOM PLAN

SCALE: 1/4"=1'-0"

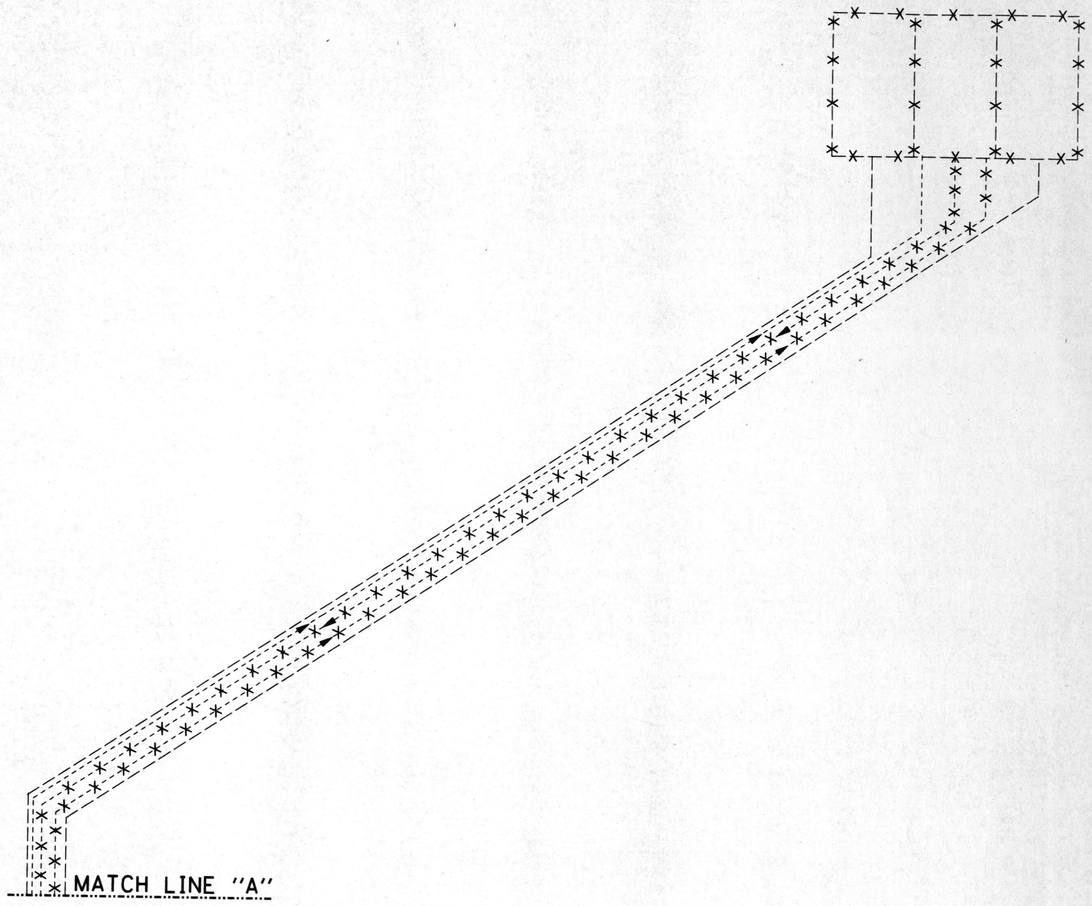

EXISTING PIPING AND DEMOLITION - BUILDING #67 NORTH AREA PLAN

SCALE: NONE

NOTES:

1. SURVEY ALL EXISTING CONDITIONS AND NOTE THE FULL EXTENT OF RENOVATION REQUIRED, INCLUDING DEMOLITION, TEMPORARY PIPING & EQUIPMENT AND INSTALLATION. CONTRACTOR SHALL FIELD FIT THE INSTALLATION AND SUBMIT SHOP DRAWINGS AND COORDINATION DRAWINGS. THIS DRAWING SHOWS THE GENERAL INTENT.
2. (X) INDICATES ITEM TO BE REMOVED.

REFERENCES:

AS BUILT

DATE: FEBRUARY 3, 2003

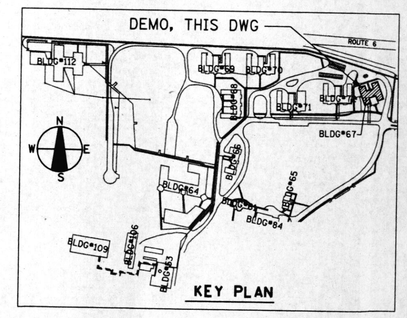

REVISIONS			DRAWN	PREPARED	SEAL
NO.	DATE	REMARKS	GGL	APM	
			TRACED	APPROVED	
			CHECKED	APPROVED	
			APM	FRD	

STV Incorporated
engineers/architects/planners/scientists/construction managers
70 W. MADISON ST. SUITE 2840 CHICAGO, IL 60602

CAPITAL DEVELOPMENT BOARD

State of Illinois
George H. Ryan, Governor

TUNNEL AND STEAM PIPING RENOVATIONS
EXISTING PIPING AND DEMOLITION BUILDING #67 EQUIPMENT ROOM PLAN & OUTSIDE NORTH AREA

ELGIN MENTAL HEALTH CENTER
750 SOUTH STATE STREET
ELGIN, ILLINOIS 60123

CDB PROJECT NO: 321-055-097 PH-2
DATE: FEBRUARY 3, 2003
SHEET NO: M-36
OF SHEETS

I:#PROJECTS#1642#MECH#M36.DGN

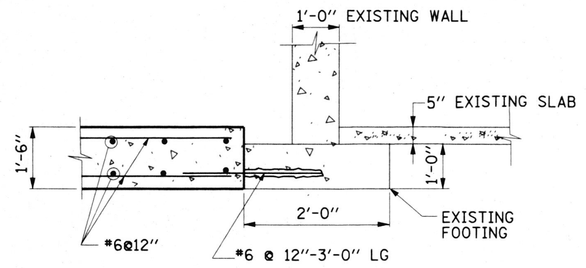

3 DETAIL

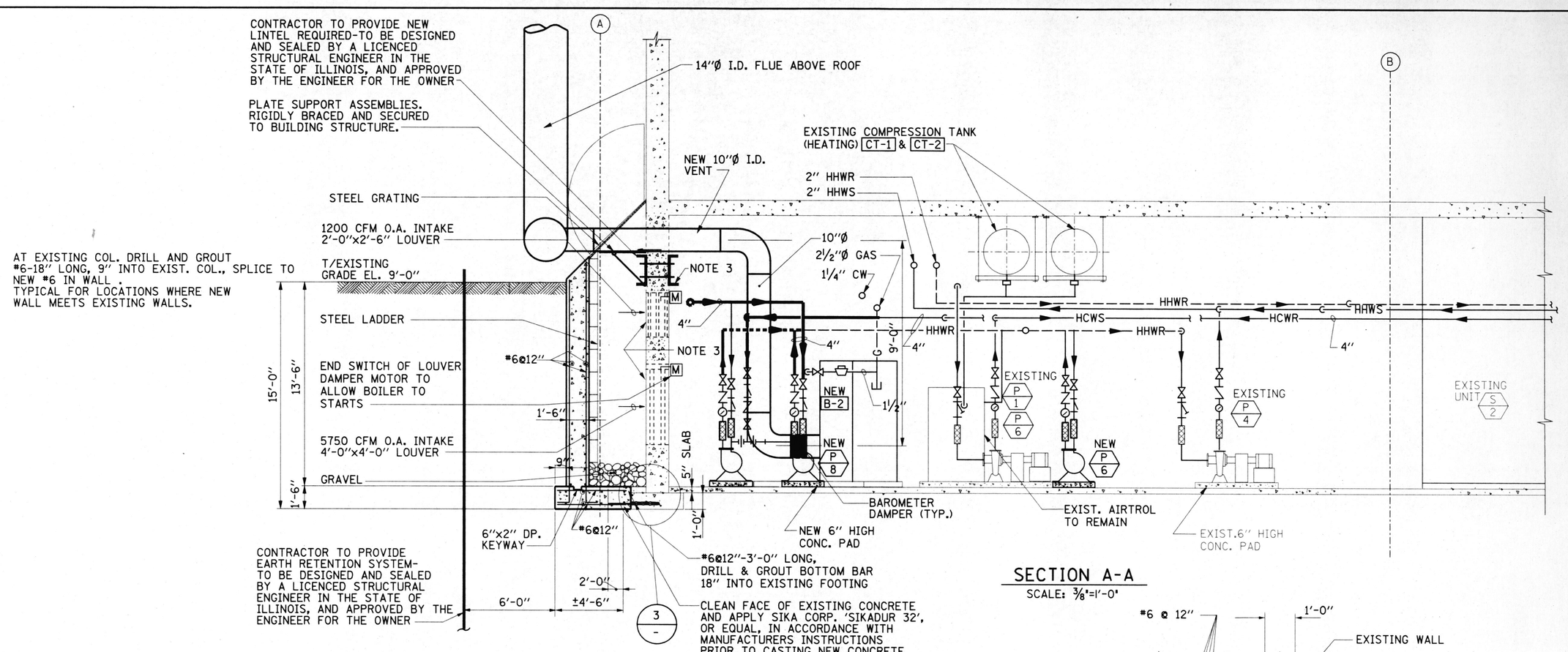

SECTION A-A
SCALE: 3/8"=1'-0"

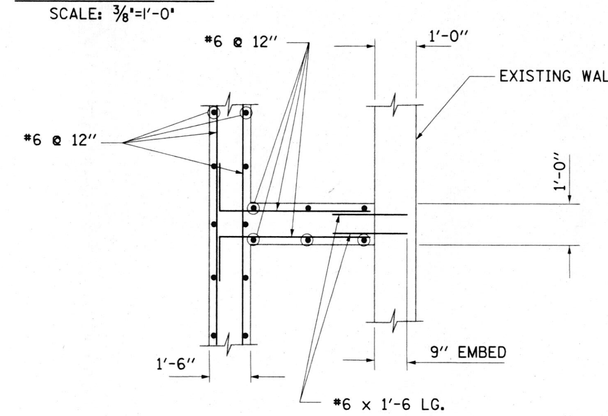

1 DETAIL

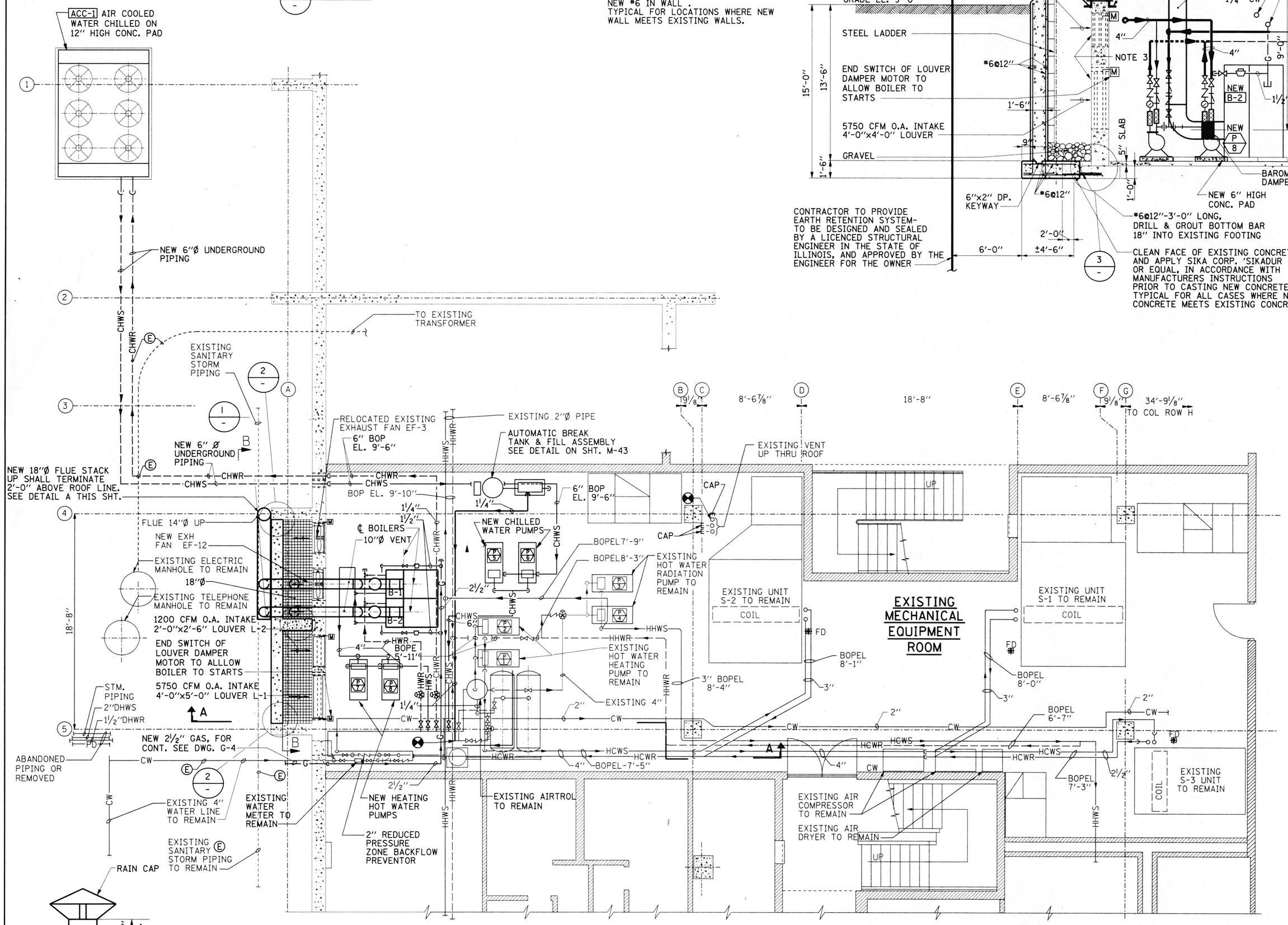

DETAIL A
N.T.S.

NEW BOILERS & PIPINGS - BUILDING #67 EQUIPMENT ROOM PLAN
SCALE: ¼"=1'-0"

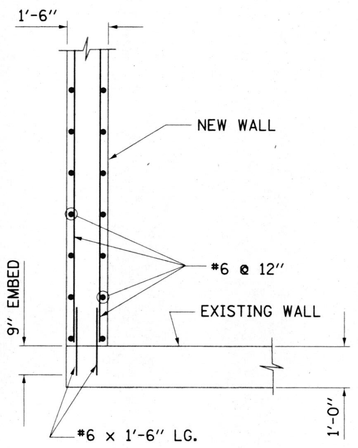

2 DETAIL
(TYP. AT BOTH ENDS OF WALL)

NOTES:

1. SURVEY ALL EXISTING CONDITIONS AND NOTE THE FULL EXTENT OF RENOVATION REQUIRED, INCLUDING DEMOLITION, TEMPORARY PIPING & EQUIPMENT AND INSTALLATION. CONTRACTOR SHALL FIELD FIT THE INSTALLATION AND SUBMIT SHOP DRAWINGS AND COORDINATION DRAWINGS. THIS DRAWING SHOWS THE GENERAL INTENT.
2. CONTRACTOR TO PROVIDE PHYSICAL EXPLORATORY INVESTIGATION OF EXISTING UTILITIES IN THE AREA OF NEW CONSTRUCTION NOTED AS Ⓔ.
3. GENERAL CONTRACTOR IS TO PROVIDE AND INSTALL LINTELS. HEATING CONTRACTOR IS TO PROVIDE OPENINGS IN EXTERIOR WALL.

REFERENCES:

G-4, M-29, M-32, M-36

AS BUILT
DATE: FEBRUARY 3, 2003

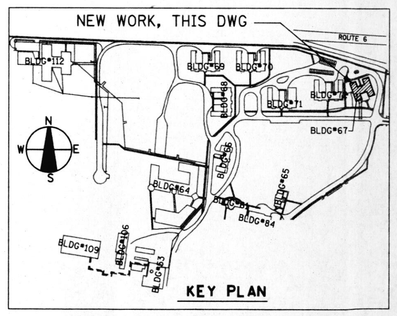

REVISIONS			DRAWN	PREPARED
NO.	DATE	REMARKS	GGL	APM
1	5/21/01	REVISED NEW INTAKE WALL	TRACED	APPROVED
			CHECKED	APPROVED
	11-06-02	AS BUILT DRAWING	APM	FRD

SEAL: ANTHONY R. ADAMS 062-037055 LICENSED PROFESSIONAL ENGINEER
LIC. EXP. DATE 11/30/03

STV Incorporated
engineers/architects/planners/scientists/construction managers
70 W. MADISON ST. SUITE 2840 CHICAGO, IL 60602

CAPITAL DEVELOPMENT BOARD

State of Illinois
George H. Ryan, Governor

TUNNEL AND STEAM PIPING RENOVATIONS
NEW BOILERS & PIPINGS
BUILDING #67 EQUIPMENT ROOM PLAN
ELGIN MENTAL HEALTH CENTER
750 SOUTH STATE STREET
ELGIN, ILLINOIS 60123

CDB PROJECT NO: 321-055-097 PH-2
DATE: FEBRUARY 3, 2003
SHEET NO: M-37A
OF SHEETS

PROJECTS\1642\MECHM37.dgn 02/04/2003 09:34:21 AM

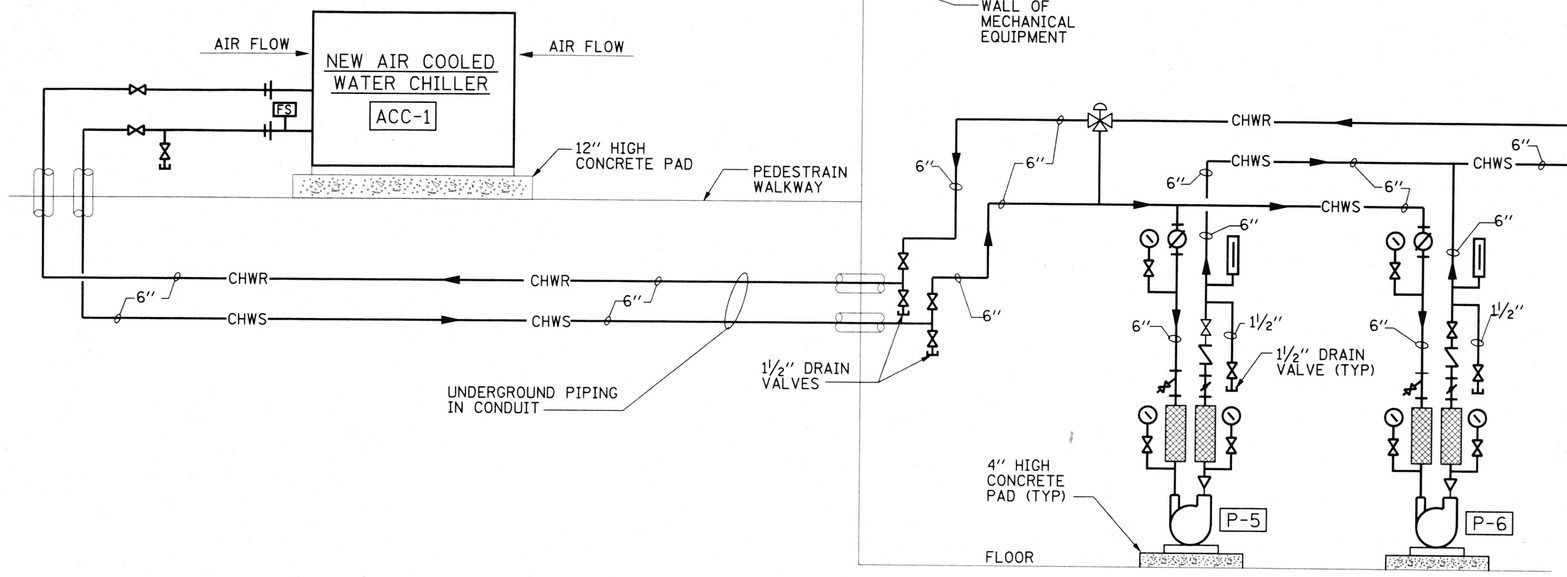

NEW CHILLED WATER PUMPS

MECHANICAL EQUIPMENT ROOM

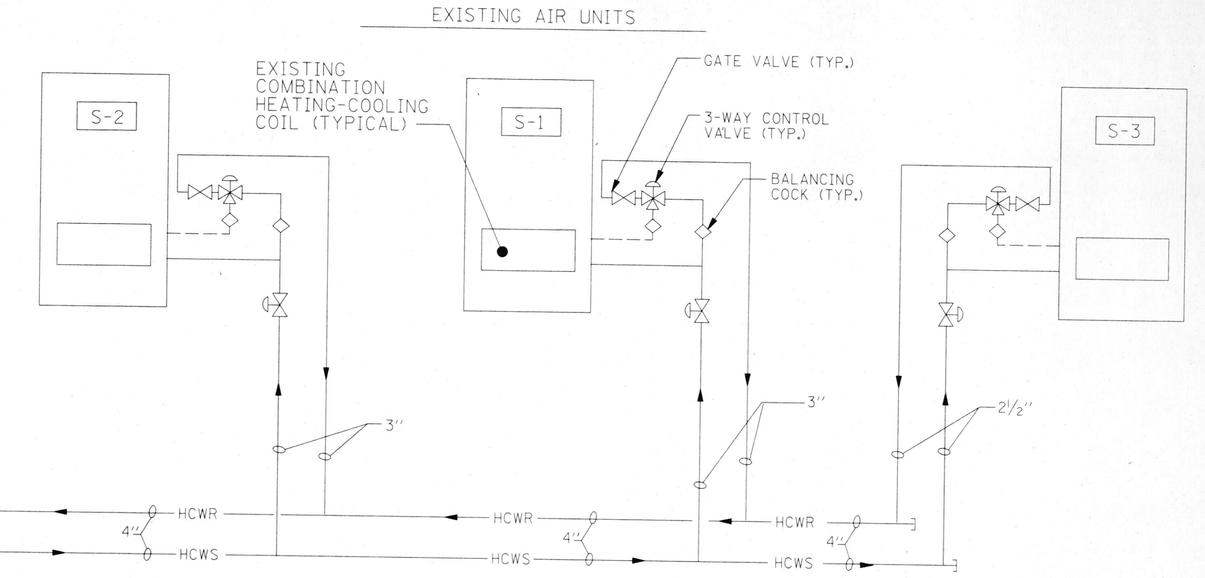

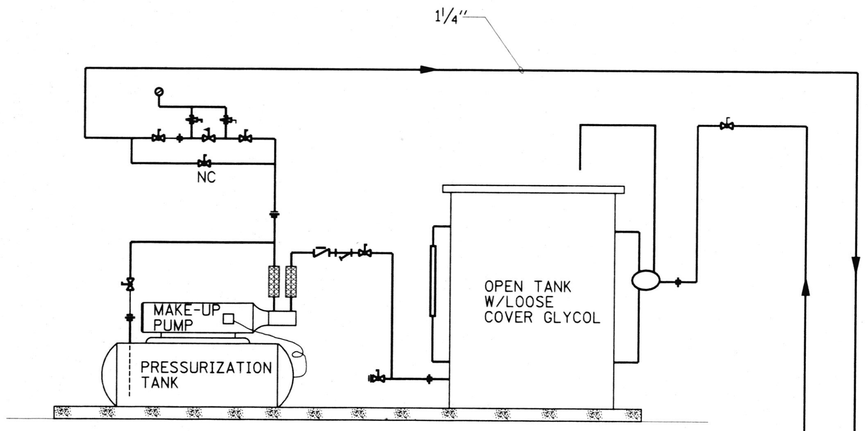

AUTOMATIC BREAK TANK / FILL ASSEMBLY

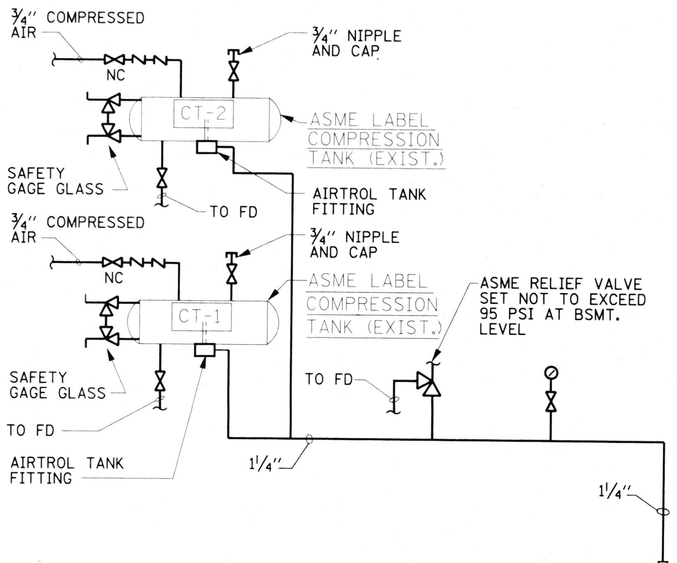

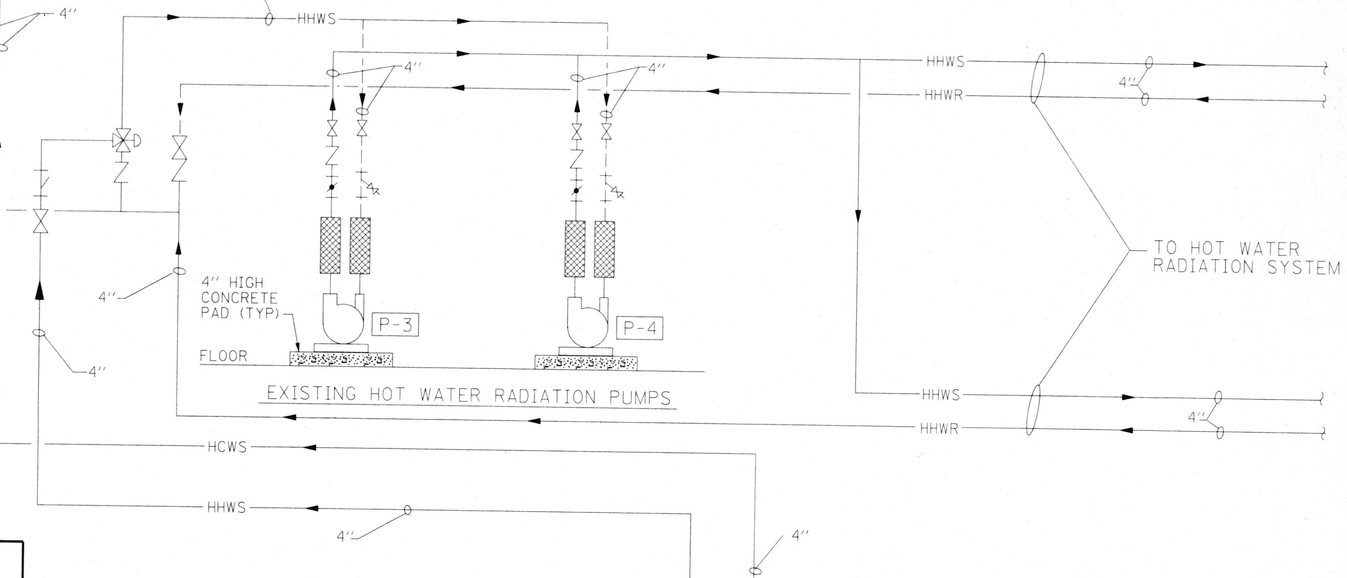

EXISTING HOT WATER RADIATION PUMPS

NEW HOT WATER POWER FIN BOILERS

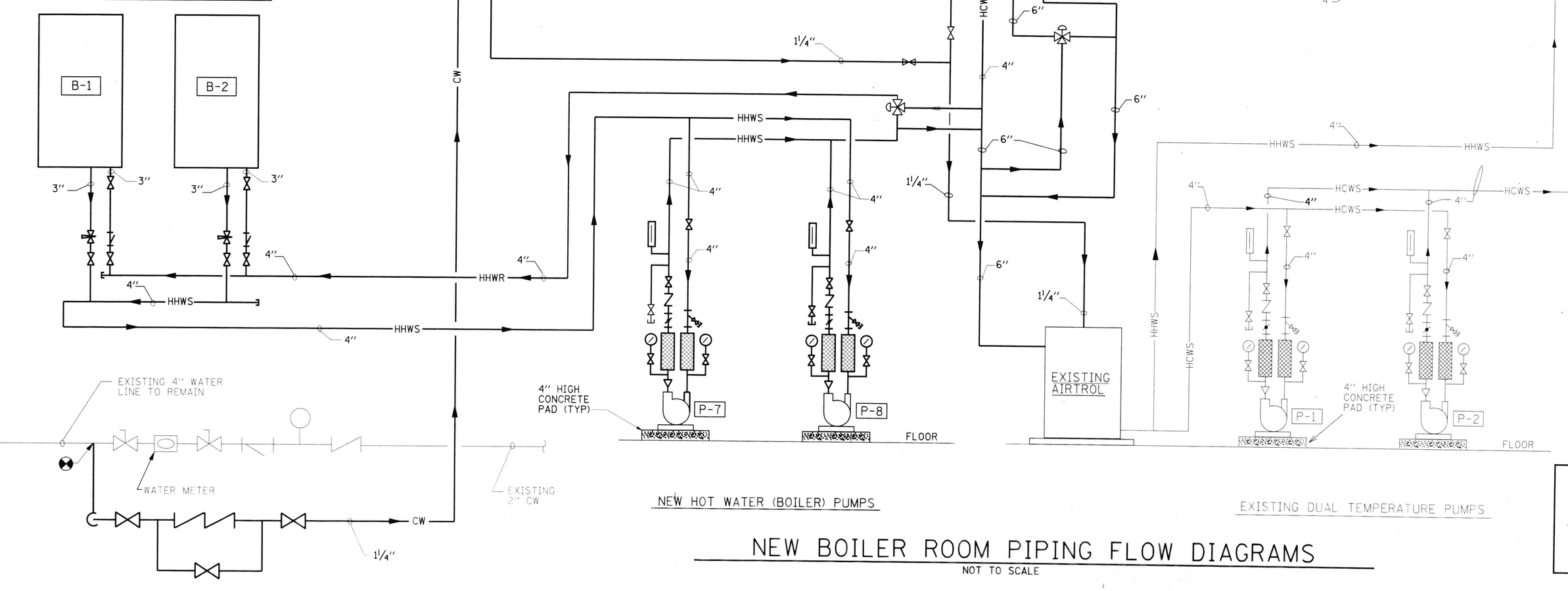

NEW HOT WATER (BOILER) PUMPS

EXISTING DUAL TEMPERATURE PUMPS

NEW BOILER ROOM PIPING FLOW DIAGRAMS

NOT TO SCALE

NOTES:

1. FOR SYMBOLS, & ABBREVIATION SEE DWG. M-1.
2. FOR EQUIPMENT SCHEDULE SEE DWG. M-44.
3. MODIFIED JOHNSON CONTROLS TO ACCOMMODATE CHILLER AND NEW BOILER MANAGEMENT CONTROLS.

REFERENCES:

G-2.....INDEX OF DRAWING

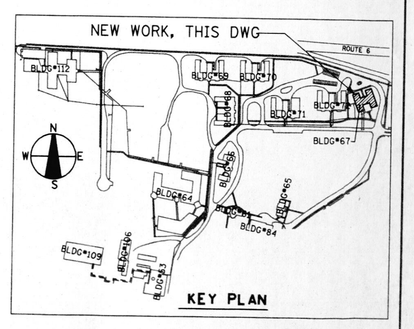

AS BUILT

DATE: FEBRUARY 3, 2003

REVISIONS			DRAWN	PREPARED	SEAL
NO.	DATE	REMARKS	GGL	APM	
			TRACED	APPROVED	
			CHECKED	APPROVED	
			APM	FRD	

STV Incorporated
engineers/architects/planners/scientists/construction managers
70 W. MADISON ST. SUITE 2840 CHICAGO, IL 60602

CAPITAL DEVELOPMENT BOARD

State of Illinois
George H. Ryan, Governor

TUNNEL AND STEAM PIPING RENOVATIONS
BUILDING #67
NEW BOILER ROOM PIPING FLOW DIAGRAMS
ELGIN MENTAL HEALTH CENTER
750 SOUTH STATE STREET
ELGIN, ILLINOIS 60123

CDB PROJECT NO: 321-055-097 PH-2
DATE: FEBRUARY 3, 2003
SHEET NO: M-38
OF SHEETS

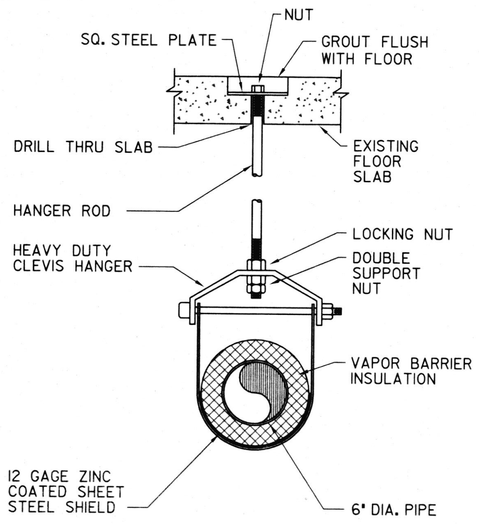

CLEVIS HANGER DETAIL
NTS

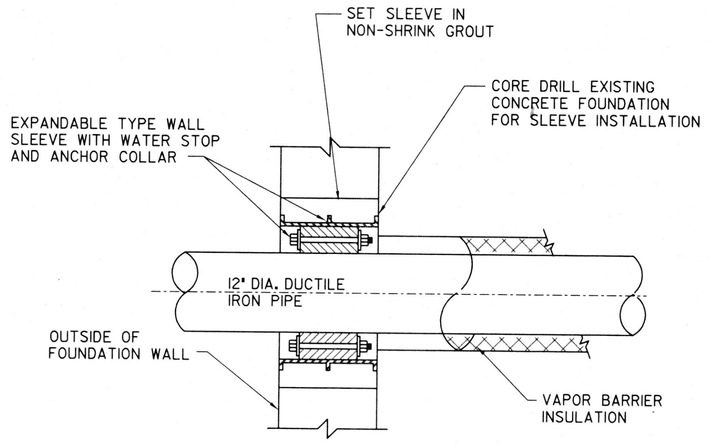

FOUNDATION WALL SLEEVE DETAIL
NTS

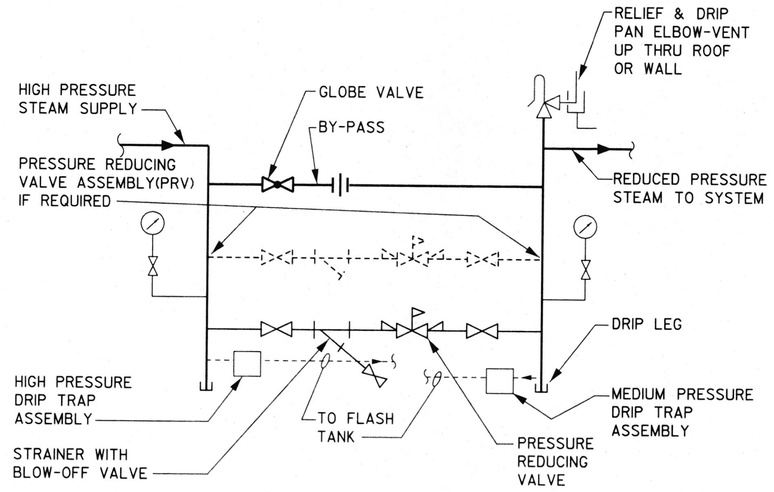

SINGLE STAGE PRESSURE REDUCING VALVE STATION
NTS

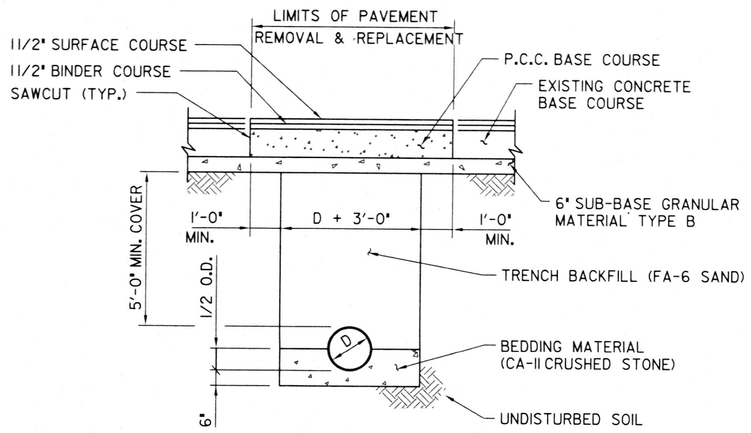

SECTION THRU ROADBED
NTS

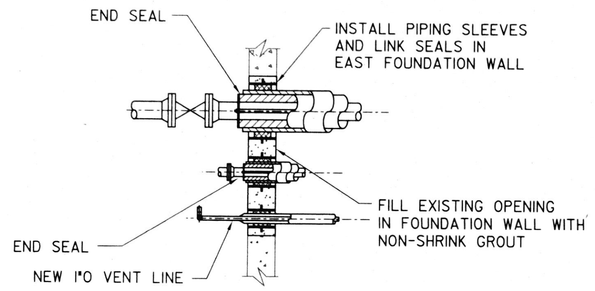

DETAIL
NTS

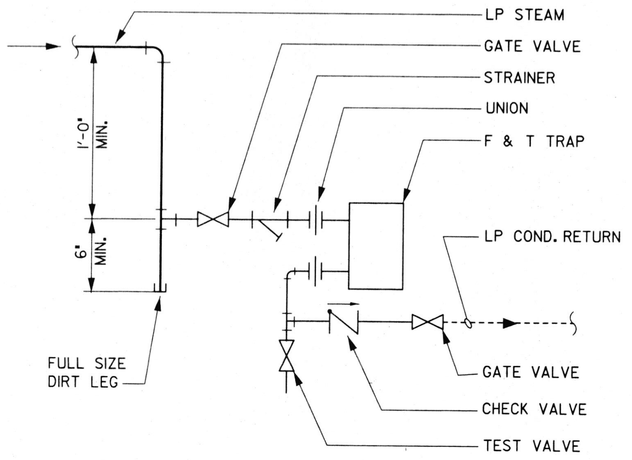

LOW PRESSURE DRIP STATION
NTS

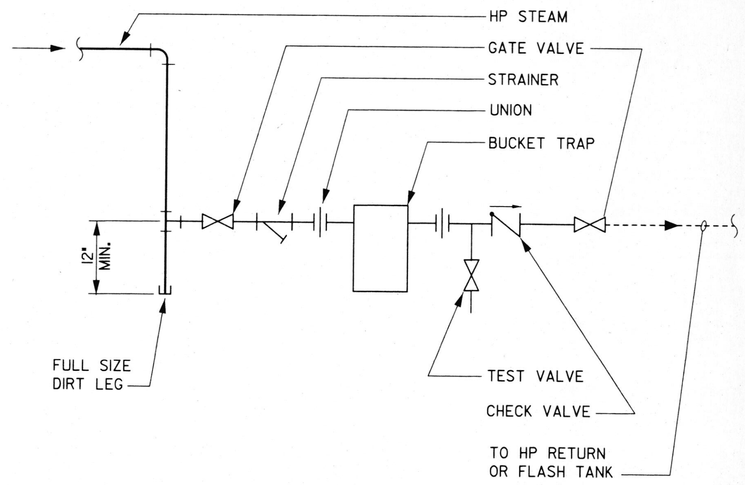

MEDIUM AND HIGH PRESSURE DRIP ASSEMBLY

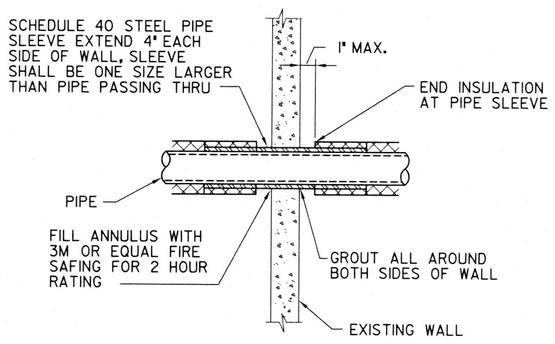

INTERIOR WALL SLEEVE DETAIL
NTS

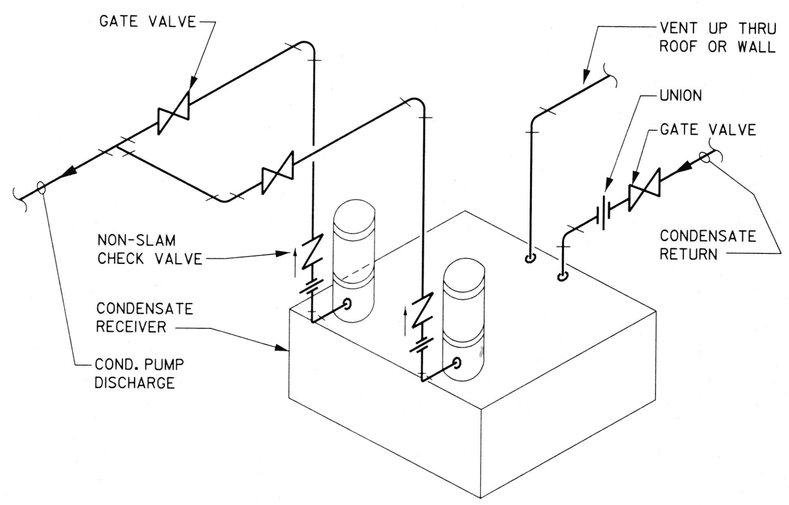

PIPING AT DUPLEX CONDENSATE PUMP
NTS

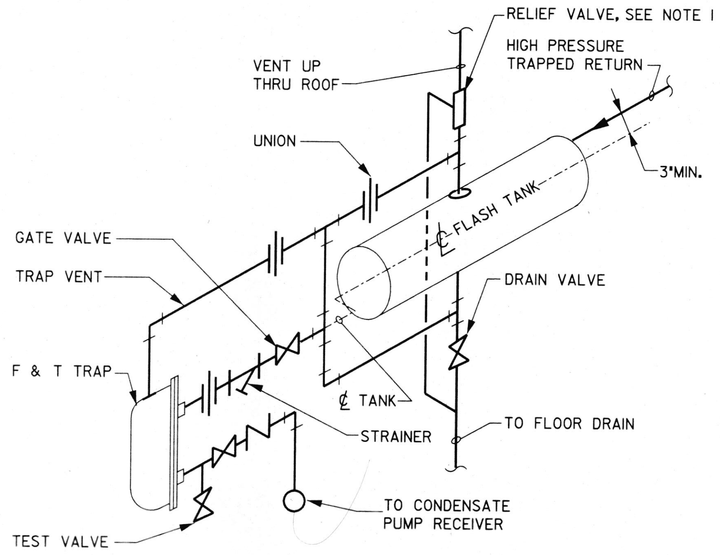

FLASH TANK PIPING DETAIL
NTS

NOTE:

1. CONTRACTOR TO ADD RELIEF VALVE IN THE FOLLOWING PHASE 1 LOCATIONS SEE SITE LOCATION M-1, M-2, & G-3

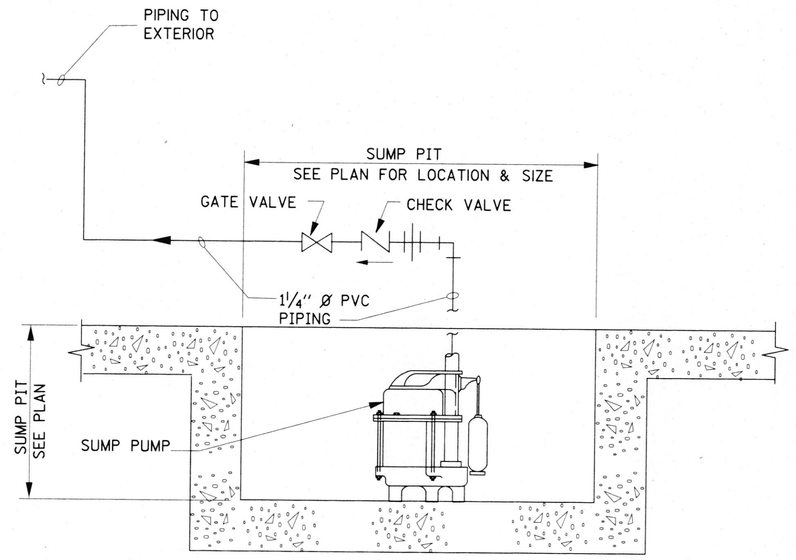

ENLARGEMENT AREA
SUBMERSIBLE SUMP PUMP PIPING DETAIL
NTS

AS BUILT
DATE: FEBRUARY 3. 2003

REVISIONS			DRAWN	PREPARED
NO.	DATE	REMARKS	DMR/GGL	APM
			TRACED	APPROVED
			CHECKED	APPROVED
			APM	FRD

SEAL

STV Incorporated
engineers/architects/planners/scientists/construction managers
70 W. MADISON ST. SUITE 2840 CHICAGO, IL 60602

CAPITAL DEVELOPMENT BOARD

State of Illinois
George H. Ryan, Governor

TUNNEL AND STEAM PIPING RENOVATIONS
MISCELLANEOUS DETAILS

ELGIN MENTAL HEALTH CENTER
750 SOUTH STATE STREET
ELGIN, ILLINOIS 60123

CDB PROJECT NO: 321-055-097 PH-2
DATE: FEBRUARY 3. 2003
SHEET NO: M-42
OF SHEETS

PROJECTS\TEGA\MECH\M42.DGN 2/3/04 2003 10:18:01 AM

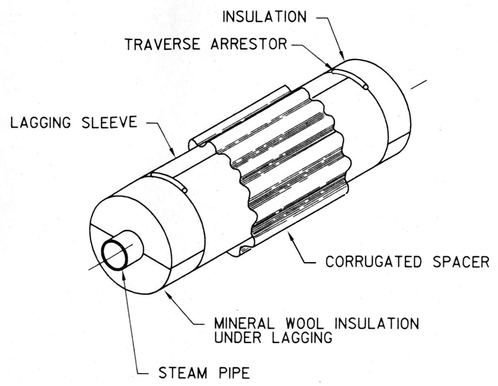

STEAM PIPE DETAIL
STRAIGHT SINGLE PIPE SUPPORT
SCALE:NONE

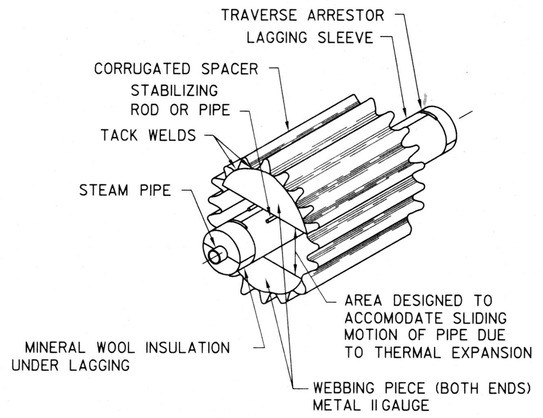

STEAM PIPE DETAIL
OVAL SINGLE PIPE SUPPORT
SCALE:NONE

BURIED PIPING DETAILS

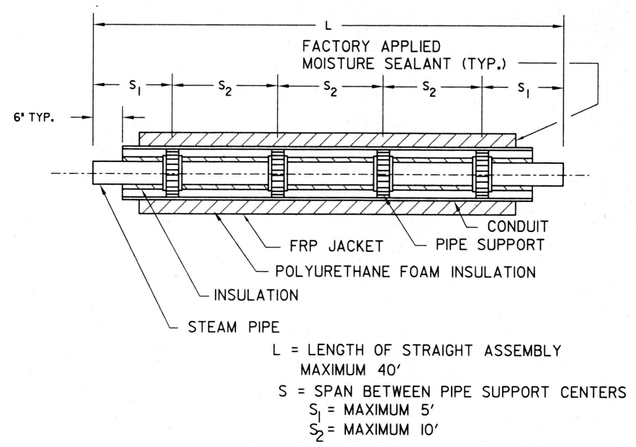

L = LENGTH OF STRAIGHT ASSEMBLY
MAXIMUM 40'
S = SPAN BETWEEN PIPE SUPPORT CENTERS
S_1 = MAXIMUM 5'
S_2 = MAXIMUM 10'

STEAM PIPE DETAIL
STRAIGHT ASSEMBLY
SCALE: NONE

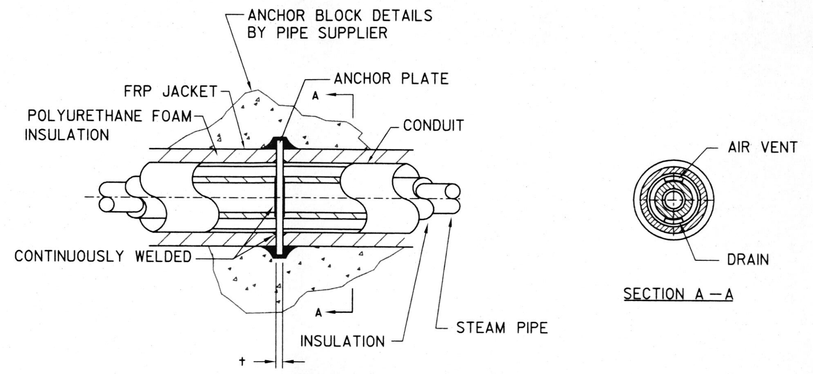

† = ANCHOR PLATE THICKNESS
1/2" UP TO 22" CONDUIT SIZE
3/4" FOR 24" AND LARGER CONDUIT SIZES.

STEAM PIPE DETAIL
STANDARD ANCHOR ASSEMBLY
SCALE: NONE

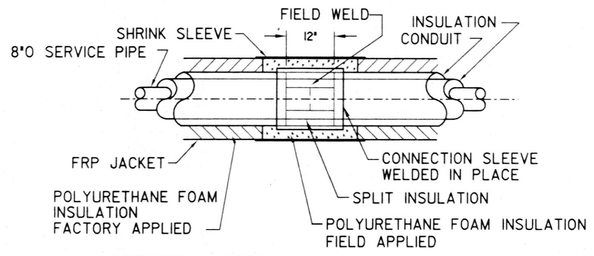

• CUT TO LENGTH AT INSTALLATION

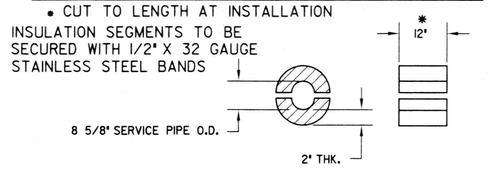

SPLIT INSULATION

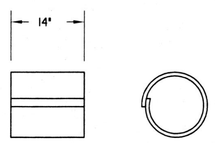

STEEL CONNECTION SLEEVE

STEAM PIPE DETAIL
FIELD CLOSURE, KIT ASSEMBLY
SCALE:NONE

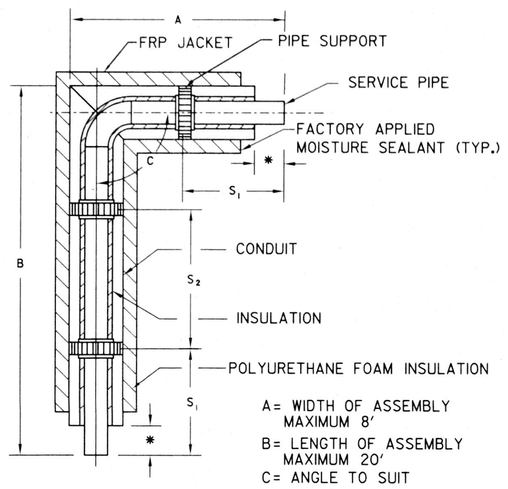

A= WIDTH OF ASSEMBLY
MAXIMUM 8'
B= LENGTH OF ASSEMBLY
MAXIMUM 20'
C= ANGLE TO SUIT
S = SPAN BETWEEN PIPE GUIDES
S1 = MAXIMUM 5'
S2 = MAXIMUM 10'
• = 6" MINUS COLD SPRINGING

STEAM PIPE DETAIL
ELBOW ASSEMBLY
SCALE:NONE

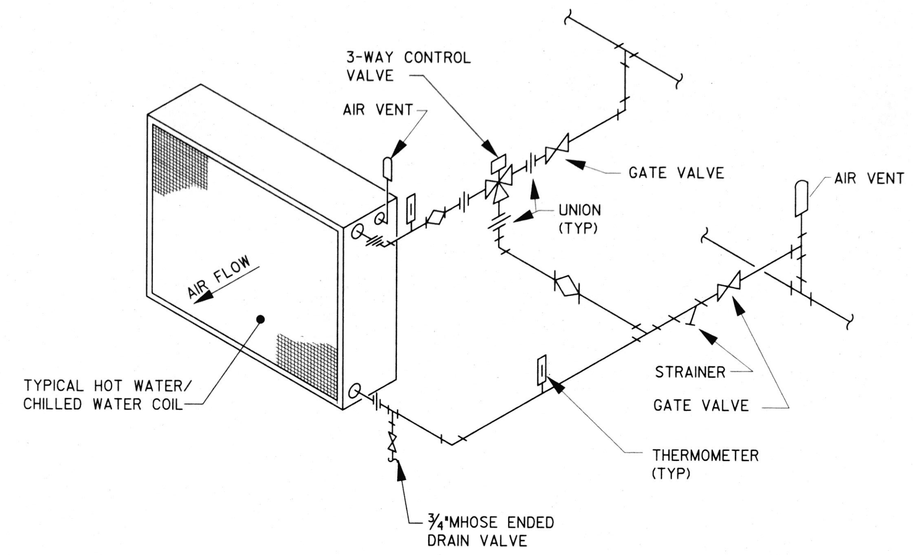

EXISTING PIPING-NO CHANGE
DIAGRAM OF CONNECTIONS TO HOT - CHILLED WATER COILS
CONTROLLED BY 3-WAY MIXING VALVE
SCALE: NONE

BURIED PIPING DETAILS

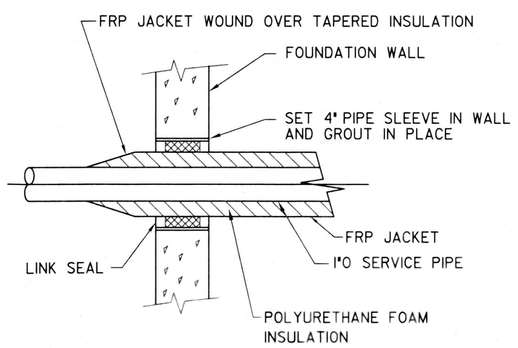

COND. PUMP VENT PIPE
END SEAL DETAIL
SCALE:NONE

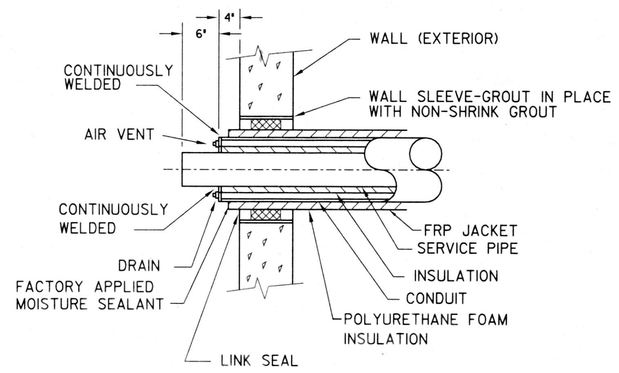

STEAM & COND. PIPE DETAIL
END SEAL ASSEMBLY
SCALE:NONE

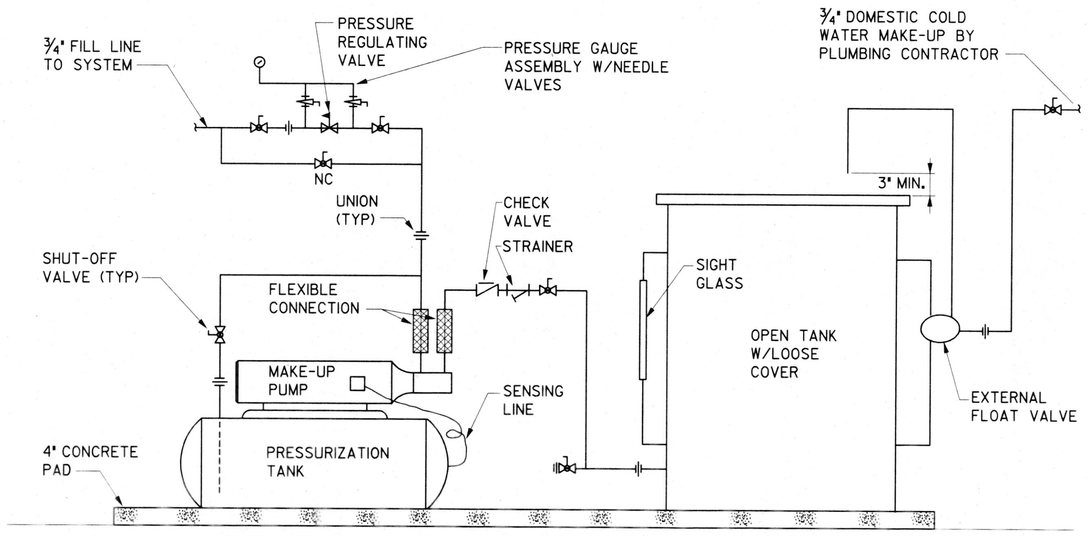

GLYCOL
AUTOMATIC BREAK TANK / FILL ASSEMBLY
SCALE: NONE

AS BUILT
DATE: FEBRUARY 3, 2003

BURIED PIPING DETAILS

REVISIONS			DRAWN	PREPARED	SEAL
NO.	DATE	REMARKS	DMR/GGL	APM	
			TRACED	APPROVED	

STV Incorporated
engineers/architects/planners/scientists/construction managers
70 W. MADISON ST. SUITE 2840 CHICAGO, IL 60602

CAPITAL DEVELOPMENT BOARD

State of Illinois
George H. Ryan, Governor

TUNNEL AND STEAM PIPING RENOVATIONS
MISCELLANEOUS DETAILS

ELGIN MENTAL HEALTH CENTER
750 SOUTH STATE STREET
ELGIN, ILLINOIS 60123

CDB PROJECT NO: 321-055-097 PH-2
DATE: FEBRUARY 3, 2003
SHEET NO: M-43
OF SHEETS

CONDENSATE PUMP SCHEDULE

SYMBOL	LOCATION	TYPE	CAPACITY GPM	TOTAL HEAD PSI	PUMP		MOTOR	RECEIVER		VIBRATION ISOLATION		BASED ON SKIDMORE	REMARKS
					HP	RPM	V/PH/HZ	CAPACITY GALS.	MATERIAL	TYPE	MIN. STA. DEFL. IN.		
CP-26-1	BUILDING 26 NORTH	DUPLEX	20	75	3	3500	208/3/60	21	CAST IRON	4" HIGH CONCRETE		VCS-157-1/2	
CP-26-2	BUILDING 26 SOUTH	DUPLEX	20	75	3	3500	208/3/60	21	CAST IRON	4" HIGH CONCRETE		VCS-157-1/2	
CP-30-1	BUILDING 30	DUPLEX	23	75	3	3500	208/3/60	21	CAST IRON	4" HIGH CONCRETE		VCS-157-1/2	
CP-30-2	ENLARGED PLAN #25	DUPLEX	45	75	7½	3500	208/3/60	45	CAST IRON	4" HIGH CONCRETE		VCS-307-1/2	
CP-110	BUILDING 110	DUPLEX	23	75	3	3500	208/3/60	21	CAST IRON	4" HIGH CONCRETE		VCS-157-1/2	

STEAM PRV STATION

SYMBOL	LOCATION	STEAM CAPACITY LBS/HR	INLET PRESSURE PSIG	OUTLET PRESSURE PSIG	VALVE SIZE	VALVE TYPE	BASED ON	REMARKS
PRV-30-2	ENLARGED PLAN #25	13104	100	50	6"	FIG 205	BOYLSTON	
PRV-1	BUILDING 30	13104	150	50	4"	FIG 205	BOYLSTON	
PRV-2	BUILDING 30	13104	50	10	8"	FIG 205	BOYLSTON	

EXHAUST FAN SCHEDULE

SYMBOL	LOCATION	TYPE	RPM	S.P INCHES	CAPACITY CFM	TIP SPEED FPM	DRIVE	MOTOR				BASED ON	REMARKS
								HP	V	P	HZ		
EF-11	ENLARGED PLAN #25	PROPELLER	1300	¼"	150	2765	DIRECT	1/60	120	1	60	GREENHECK GW-70-G	
EF-12	MECH ROOM BLDG #67	PROPELLER	1050	⅜"	1500	—	DIRECT	¼	120	1	60	COOK TYPE SPD	
EF-13	MECH ROOM BLDG #46	PROPELLER	950	⅛"	400	—	DIRECT	1/10	120	1	60	COOK TYPE SPD	

HOT WATER BOILER SCHEDULE

SYMBOL	LOCATION	BOILER HP	CAPACITY (MBH)		HEATING SURFACE SQ. FT.	GPM	WATER TEMPERATURE		WORKING PRESSURE (PSI)	ELECTRICAL DATA				GAS CONNECTION		REMARKS
			INPUT	OUTPUT			ENTERING	LEAVING		AMP.	VOLT	PH	HZ	SIZE	MIN. PRESSURE	
B-1	MECH. ROOM BLDG. #67	50.7	1,700	1,479	—	90 GPM @35°ΔT	165	200	160	20	120	1	60	1½"	4" W.C.	LAYOUT BASED ON PBN 1700 LOCHINVAR
B-2	MECH. ROOM BLDG. #67	50.7	1,700	1,479	—	95 GPM @40°ΔT	165	200	160	20	120	1	60	1½"	4" W.C.	LAYOUT BASED ON PBN 1700 LOCHINVAR

NOTES: 1. EACH BOILER SUPPLIED WITH BOILER PUMP.
2. 25% - 100% FULL PROPORTIONAL FIRING.

AIR COOLED CHILLER UNIT SCHEDULE

SYMBOL	LOCATION	REFRIGERATION SIDE							CONDENSER SIDE					ELECTRICAL DATA		REMARKS
		CAPACITY TONS	KW INPUT	COOLER					KW INPUT	DRIVE	REFRIGERANT CHARGE	AMBIENT AIR TEMPERATURE	CONDENSER FAN	POWER	CURRENT CHARACTERISTICS	
				GPM	EWT OF	LWT OF	NO. OF PASSES	PRESSURE DROP								
ACC-1	OUTSIDE BLDG. #67	94.3 TONS	115.7	223.7	55	44	—	13.1 FT	69.6 KW EACH	DIRECT	268 LBS	95	6@30" DIA PROPELLER TYPE 1140 RPM, 68400 CFM TOTAL	—	480-3-60	BASED ON CARRIER 30GXN106-Y-6-1

NOTES: 1. CHILLER UNIT SHALL BE INSTALLED ON 1" THK MINIMUM NEOPRENE VIBRATION ISOLATION PAD.
2. FACTORY INSTALLED, NON-FUSED DISCONNECT.
3. VICTAULIC-TYPE COOLER NOZZLE.
4. REQUIRES MAIN POWER FEED.
5. FIELD-INSTALLED CONTROL TRANSFORMER.
6. 30% ETHYLENE GLYCOL.
7. R-134a

LOW PRESSURE STEAM BOILER SCHEDULE

SYMBOL	LOCATION	BOILER HP	CAP (MBH)		HEATING SURFACE SQ. FT.	INLET STEAM	BURNER BLOWER HP (GAS)	MOTOR			WORKING PRESSURE (PSI)	GAS CONNECTION		REMARKS
			INPUT	OUTPUT				VOLTS	PH	HZ		SIZE	MIN. PRESSURE	
1	MECHANICAL ROOM BLDG. #46	30	1260	1030	—	3"	⅓	120	1	60	15	1¼"	7 IN WC	LAYOUT BASED ON MODEL FPS-39-30 PRECISION STEAM BOILER

NOTES: 1. PROVIDE REQUIREMENTS OF CSD-1 CODE FOR BOILER CONTROL AND GAS TRAIN.
2. BOILER - BURNER PACKAGE TO HAVE UL LABEL.
3. 10" ⌀ FLUE CONNECTION.

RADIANT HEATING SCHEDULE

SYSTEM NUMBER	LOCATION	No. OF BURNERS	MODEL NUMBER	BTU CAPACITY	CONTROL PANEL	No. OF STATS	VACUUM PUMP No.	MOTOR HP	VOLTS	PH	HZ	4"⌀ PIPE ALUMINIZED HEAT TREATED	V.P. MODEL No.	REMARKS (MODEL USED IN DESIGN)
1	BLDG. #109	4	CRVB-12	120,000	1	1	VP-1	¾	120	1	60	YES	EP-200	ROBERT GORDON MODEL CRVB-12
2	BLDG. #109	4	CRVB-12	120,000	1	1	VP-2	¾	120	1	60	YES	EP-200	ROBERT GORDON MODEL CRVB-12
3	BLDG. #109	2	CRVB-12	120,000	1	1	VP-3	¾	120	1	60	YES	EP-200	ROBERT GORDON MODEL CRVB-12
4	BLDG. #109	3	CRVB-4	40,000	1	1	VP-4	¾	120	1	60	YES	EP-200	ROBERT GORDON MODEL CRVB-4
5	BLDG. #109	4	(2)CRVB-6	60,000	1	2	VP-5	¾	120	1	60			ROBERT GORDON MODEL CRVB-6
			(2)CRVB-12	120,000	—	—		¾	120	1	60	YES	EP-200	ROBERT GORDON MODEL CRVB-12
6	BLDG. #109	4	CRVB-10	100,000	1	2	VP-6	¾	120	1	60	YES	EP-200	ROBERT GORDON MODEL CRVB-10
7	BLDG. #109	5	CRVB-6	60,000	1	3	VP-7	¾	120	1	60	YES	EP-200	ROBERT GORDON MODEL CRVB-6
8	BLDG. #109	6	CRVB-6	60,000	1	2	VP-8	¾	120	1	60	YES	EP-200	ROBERT GORDON MODEL CRVB-6
9	BLDG. #109	3	CRVB-6	60,000	1	2	VP-9	¾	120	1	60	YES	EP-200	ROBERT GORDON MODEL CRVB-6
VANTAGE	BLDG. #109	2	CTH2-4	40,000	—	2	—	1	120	1	60	YES	—	ROBERT GORDON MODEL CTH2-40

SUMP PUMP SCHEDULE

TAG No.	LOCATION	TYPE	PUMP		MOTOR			BASIN		REMARKS
			CAPACITY GPM	HEAD (FT)	HP	RPM	V/PH/HZ	SIZE (IN)	DEPTH (FT)	
SP-1	ENLARGEMENT #20	SIMPLEX	30	18	½	1750	120/1/60	—	—	SEE SHEET M-6
SP-2	ENLARGEMENT #16	SIMPLEX	30	18	½	1750	120/1/60	—	—	SEE SHEET M-6
SP-3	ENLARGEMENT #14	SIMPLEX	30	18	½	1750	120/1/60	—	—	SEE SHEET M-6
SP-4	ENLARGEMENT #12	SIMPLEX	30	18	½	1750	120/1/60	—	—	SEE SHEET M-6
SP-5	ENLARGEMENT #10	SIMPLEX	30	18	½	1750	120/1/60	—	—	SEE SHEET M-6
SP-6	ENLARGEMENT #8	SIMPLEX	30	18	½	1750	120/1/60	—	—	SEE SHEET M-6
SP-7	ENLARGEMENT #25	SIMPLEX	30	18	½	1750	120/1/60	—	—	SEE SHEET M-5
SP-8	ENLARGEMENT #18	SIMPLEX	30	18	½	1750	120/1/60	—	—	SEE SHEET M-6

FLASH TANK SCHEDULE

SYMBOL	LOCATION	SERVICE	CAPACITY		SIZE		DESIGN WORKING PRESSURE PSIG	BASED ON	REMARKS
			NOM. GALS.	ACTUAL GALS.	DIA. INCH	LENGTH FT-IN.			
FT-26-1	BUILDING 26 NORTH		-	-	20	60	150	SPIRAX SARCO	
FT-26-2	BUILDING 26 SOUTH		-	-	20	60	150	SPIRAX SARCO	
FT-30	ENLARGED PLAN #25		-	-	24	60	150	SPIRAX SARCO	

CIRCULATING PUMP SCHEDULE

SYMBOL	LOCATION	AREA SERVED	GPM	HEAD FT	MOTOR					SERVICE	PUMP TYPE	REMARKS
					HP	RPM	VOLT	PH	HZ			
P-5	BLDG. #67	MECH. ROOM	220	60	5	1750	480	3	60	PRIMARY CHILLED WATER	CENTRIFUCAL BASE MTD	BASED ON B & G MODEL 1510
P-6	BLDG. #67	MECH. ROOM	220	60	5	1750	480	3	60	PRIMARY CHILLED WATER	CENTRIFUCAL BASE MTD	BASED ON B & G MODEL 1510
P-7	BLDG. #67	MECH. ROOM	340	45	7½	1750	480	3	60	PRIMARY HOT WATER	CENTRIFUCAL BASE MTD	BASED ON B & G MODEL 1510
P-8	BLDG. #67	MECH. ROOM	340	45	7½	1750	480	3	60	PRIMARY HOT WATER	CENTRIFUCAL BASE MTD	BASED ON B & G MODEL 1510

FAN WALL HEATER SCHEDULE

SYMBOL	LOCATION	AREA SERVED	KW	VOLT	PH	HZ	REMARKS
FWH-1	BLDG. #109	MEN'S LOCKER ROOM	1.5	120	3	60	BASED ON MARKEL SERIES 3310
FWH-2	BLDG. #109	MEN'S TOILET ROOM	1.5	120	3	60	BASED ON MARKEL SERIES 3310
FWH-3	BLDG. #109	MENDING STORAGE	1.5	120	3	60	BASED ON MARKEL SERIES 3310
FWH-4	BLDG. #109	WOMEN'S TOILET ROOM	1.5	120	3	60	BASED ON MARKEL SERIES 3310
FWH-5	BLDG. #109	WOMEN'S LOCKER ROOM	1.5	120	3	60	BASED ON MARKEL SERIES 3310
FWH-6	BLDG. #109	OFFICE	1.5	120	3	60	BASED ON MARKEL SERIES 3310

NIC

CHIMNEY FAN SCHEDULE

TAG	SERVING	MANUFACTURER	MODEL No.	ELECTRICAL DATA			RPM	HP (KW)	REMARKS
				AMPS	VOLTS	PH			
CF-1	NEW LOW PRESSURE STEAM BOILER	EXHAUSTO	CASV 012	1.4	120	1	1720	⅐ (0.1)	

1. ADAPTER FOR CHIMNEY FAN BY EXHAUSTO.

AS BUILT
DATE: FEBRUARY 3, 2003

REVISIONS			DRAWN	PREPARED
NO.	DATE	REMARKS	DMR/GGL	APM
			TRACED	APPROVED
			CHECKED	APPROVED
			APM	FRD

SEAL

STV Incorporated
engineers/architects/planners/scientists/construction managers
70 W. MADISON ST. SUITE 2840 CHICAGO, IL 60602

CAPITAL DEVELOPMENT BOARD

State of Illinois
George H. Ryan, Governor

TUNNEL AND STEAM PIPING RENOVATIONS
EQUIPMENT SCHEDULES

ELGIN MENTAL HEALTH CENTER
750 SOUTH STATE STREET
ELGIN, ILLINOIS 60123

CDB PROJECT NO: 321-055-097 PH-2
DATE: FEBRUARY 3, 2003
SHEET NO: M-44
OF SHEETS

I:\PROJECTS\ELGIN\CHM44.DGN 02/04/2003 10:20:25 AM

ELECTRICAL RENOVATION NOTES

1. BUILDING PLANS SHOWN ARE COMPILED FROM SOURCES BELIEVED TO BE ACCURATE. HOWEVER, THE INFORMATION SHOWN ON THESE PLANS IS CONCEPTUAL, AND CONTRACTOR SHALL BE RESPONSIBLE FOR FIELD VERIFICATIONS OF ALL DIMENSIONS, SIZES, SYSTEM VOLTAGES, QUANTITIES, AND EXTENT OF WORK. THE CONTRACTOR SHALL CAREFULLY EXAMINE THE PREMISES IN ORDER TO FAMILIARIZE WITH EXISTING CONDITIONS AND FULLY UNDERSTAND THE NATURE AND SCOPE OF WORK. DRAWINGS ARE STRICTLY SCHEMATIC. A COMPLETE COORDINATED, FUNCTIONAL, AND CODE-APPROVED SYSTEM IS INTENDED.

2. THE CONTRACTORS SHALL REFER TO THE STRUCTURAL, MECHANICAL, AND ELECTRICAL DRAWINGS AND SPECIFICATIONS FOR COORDINATION AND EXTENT OF THE WORK OF THE VARIOUS TRADES.

3. THE CONTRACTOR SHALL MAKE ALL NECESSARY PROVISIONS TO PURSUE THE WORK IN A MANNER WHICH WILL ASSURE THAT THE OPERATION OF THE BUILDING IS MINIMALLY IMPAIRED. THIS SHALL INCLUDE, BUT NOT BE LIMITED TO, DELIVERY OF SUPPLIES, TEMPORARY UTILITY CONNECTIONS, ETC.

4. ELECTRICAL DEMOLITION WORK SHALL INCLUDE REMOVAL OF ALL THE LIGHTING FIXTURES, CONDUIT WIRING, AND OTHER ELECTRICAL EQUIPMENT AND MATERIALS AS SHOWN ON THE DRAWING OR AS DIRECTED. ALL MATERIALS REMOVED SHALL BECOME PROPERTY OF THE CONTRACTORS UNLESS NOTED OTHERWISE. UNUSED CONDUIT CONCEALED IN WALLS, CEILINGS, AND FLOORS SHALL BE CAPPED AND SEALED AT THEIR TERMINATION POINTS.

5. WHERE WORK OF ONE TRADE WILL INTERFERE WITH THE WORK OF OTHER TRADES ALL TRADES SHALL ASSIST IN WORKING OUT SPACE CONDITIONS, MAKE SATISFACTORY ADJUSTMENTS AND SHALL BE PREPARED TO SUBMIT AND REVISE COORDINATED SHOP DRAWINGS.

6. WHERE CONTINUITY OF CIRCUITS OR CONDUITS SERVING ANY ELECTRICAL EQUIPMENT IN AREA OF THE EXISTING BUILDING NOT BEING ALTERED IS INTERFERED WITH, REROUTE AND RECONNECT ALL SUCH CIRCUITS OR CONDUITS.

7. WITH THE APPROVAL OF THE ENGINEER AND WITHOUT ADDITIONAL COST TO THE OWNER MAKE MINOR MODIFICATIONS IN THE WORK INCLUDING REROUTING OF CONDUITS AS REQUIRED TO RESOLVE INTERFERENCES WITH WORK OF OTHER TRADES TO ACHIEVE PROPER EXECUTION OF THE WORK.

8. EXISTING BUILDING SERVICES SHALL BE MAINTAINED AND TEMPORARY SERVICES SHALL BE PROVIDED WHEN REQUIRED. IN THE EVENT THAT SHUT DOWN CANNOT BE AVOIDED THE SERVICE INTERRUPTION SHALL BE WITH MINIMUM INCONVENIENCE TO THE OCCUPANTS AND WITH THE APPROVAL OF CDB & EMHC AND UNDER THE SUPERVISION OF THE ENGINEER.

GENERAL NOTES

1. ALL WORK SHALL BE PERFORMED IN STRICT ACCORDANCE WITH THE LATEST CODES, RULES, AND ORDINANCES OF CITY OF ELGIN, NEC AS WELL AS THE LATEST OSHA AND STATE REQUIREMENTS.

2. COORDINATE WORK WITH OTHER TRADES AND INSTALL CONDUIT AND BOXES TO CLEAR PIPES, DUCTS, OPENINGS, AND OTHER STRUCTURAL FEATURES.

3. ALL ELECTRICAL DRAWINGS SHALL BE READ IN CONJUNCTION WITH THE PROJECT SPECIFICATIONS AND ALL OTHER DRAWINGS RELATED TO THE PERFORMANCE OF THIS WORK.

4. ALL LIGHTING FIXTURES SHALL BE LOCATED AS REQUIRED ON THE JOB TO CLEAR DUCTS, PIPING, EQUIPMENT, AND/OR MECHANICAL EQUIPMENT.

5. REFER TO MECHANICAL DRAWINGS FOR EXACT LOCATION OF MOTORS AND OTHER EQUIPMENT WHICH REQUIRE ELECTRICAL CONNECTION.

6. ALL WIRING SHALL BE INSTALLED IN CONDUIT.

7. UNLESS OTHERWISE NOTED, CONTRACTOR SHALL PROVIDE ALL INDIVIDUAL DISCONNECT SWITCHES AND MOTOR STARTERS AND WIRE THRU THESE DEVICES TO THE EQUIPMENT SERVED.

8. VERIFY TYPE OF MOUNTING AND MOUNTING HARDWARE BEFORE ORDERING LIGHTING FIXTURES.

9. CONTRACTOR SHALL PROVIDE ALL CONDUIT/WIRE AS REQUIRED FOR A COMPLETE AND OPERATIONAL ELECTRICAL INSTALLATION. CONDUCTORS SHALL BE PROPERLY SIZED FOR VOLTAGE DROP.

10. CONDUIT ROUTING SHOWN ARE NOT BE CONSIDERED AS EXACT, BUT ARE TO BE USED AS A GUIDE. THE ROUTING SHOWN ARE INDICATIVE OF THE WORK TO BE INSTALLED BUT DO NOT INDICATE ALL BENDS, FITTINGS AND BOXES WHICH MAY BE REQUIRED. ROUTE CONDUIT AS REQUIRED TO COMPLETE WIRING SYSTEM.

11. ALL BRANCH WIRING SHALL BE No. 10 AWG THW COPPER MINIMUM UNLESS OTHERWISE NOTED. ALL HOME RUNS OF 50 FEET AND LONGER SHALL BE No.8 AWG THW COPPER MINIMUM.

SYMBOL	DESCRIPTION
GENERAL	
	LIGHTING PANEL
	CONTROL PANEL BY EQUIPMENT SUPPLIER
	LIGHTING FIXTURE. SEE LIGHTING FIXTURE SCHEDULE
S	SINGLE POLE TOGGLE SWITCH.
S_P	TOGGLE SWITCH. P INDICATES PILOT LIGHT
S_3	3 WAY TOGGLE SWITCH.
S_4	4 WAY TOGGLE SWITCH.
S_T	THERMAL OVERLOAD SWITCH FOR MOTOR
	DISCONNECT SWITCH
(3)	MOTOR, NUMBER INDICATES HORSE POWER
	COMBINATION MAGNETIC MOTOR STARTER
	SINGLE RECEPTACLE 20A, 2P, 3W GROUNDING
WP GFI	DUPLEX RECEPTACLE 'WP' INDICATES WEATHER PROOF GFI-INDICATES GROUND FAULT CIRCUIT INTERRUPTOR. 20A, 2P, 3W GROUNDING
GROUND / NEUTRAL / HOT	CONDUIT RUN WITH WIRES
	CONDUIT CONCEALED IN OR BELOW FLOOR SLAB
	CONDUIT OR CABLE RUN UNDERGROUND
PB	PULL BOX
J	JUNCTION BOX
	SWITCHGEAR OR UNIT SUBSTATION

FOLLOWING LETTERS WITH ANY SYMBOL INDICATE:

X	EXISTING TO BE REMOVED OR ABANDONED
XR	EXISTING TO REMAIN
-X-X-X-X-	DISCONNECT AND REMOVE EXISTING CONDUIT AND CABLES
N	NEW
N.I.C.	NOT IN CONTRACT

ABBREVIATIONS LIST

AFF	ABOVE FINISHED FLOOR	LTG	LIGHTING
AC	ALTERNATING CURRENT	LS	LOOP SWITCH
A	AMPERE	MTR	MOTOR
AMP	AMPERE	MTD	MOUNTED
C.B. OR BRK	CIRCUIT BREAKER	NEC	NATIONAL ELECTRIC CODE
CCT. OR CKT	CIRCUIT	NTS	NOT TO SCALE
C	CONDUIT	PNL	PANEL
CONN	CONNECTION	PH	PHASE
DS	DISCONNECT SWITCH	PB	PULL BOX
EF	EXHAUST FAN	RGS	RIGID GALVANIZED STEEL (HEAVY WALL) CONDUIT.
ELEC	ELECTRIC	SW	SWITCH
EMT	ELECTRIC METALLIC TUBING (THINWALL CONDUIT)	SWBD	SWITCHBOARD
EQUIP	EQUIPMENT	U.N.O.	UNLESS NOTED OTHERWISE
GRD	GROUND	V	VOLT
HP	HORSEPOWER	W	WATT
HV	HIGH VOLTAGE	WP	WEATHERPROOF
HZ	HERTZ (CYCLES/SECOND)		
JB	JUNCTION BOX		
GFI	GROUND FAULT CIRCUIT INTERRUPTOR.		

N.I.C.

MECHANICAL EQUIPMENT ELECTRICAL CONNECTION SCHEDULE *

TAG	EQUIPMENT DESCRIPTION/ LOCATION DWGS.	HP (KW)	VOLT PHASE	BRANCH CIRCUIT	FED FROM	BRANCH CIRCUIT PROTECTION SIZE C.B.	REMARKS
CP-26-1	CONDENSATE PUMP BLDG. 26 NORTH E-10/M-19	3	208V 3PH	3#10, 1#10 GRD-$\frac{3}{4}$"C	PCN	30A/3P CB	VIA CONTROLLER BY DIV. 15 CONTRACTOR AND 30A, 208V, 3PH DISC. SW BY DIV. 16 CONTRACTOR
CP-26-2	CONDENSATE PUMP BLDG. 26 SOUTH E-11/M-20	3	208V 3PH	3#10, 1#10 GRD-$\frac{3}{4}$"C	PCS	30A/3P CB	VIA CONTROLLER BY DIV. 15 CONTRACTOR AND 30A, 208V, 3PH DISC. SW BY DIV. 16 CONTRACTOR
CP-30-1	CONDENSATE PUMP BLDG. 30 E-5/M-16	3	208V 3PH	3#10, 1#10 GRD-$\frac{3}{4}$"C	EMMCC (WEST MECH RM)	30A/3P CB	VIA CONTROLLER BY DIV. 15 CONTRACTOR AND 30A, 208V, 3PH DISC. SW BY DIV. 16 CONTRACTOR
CP-30-2	CONDENSATE PUMP ENLARGED AREA #25 E-4/M-5	$7\frac{1}{2}$	208V 3PH	3#10, 1#10 GRD-$\frac{3}{4}$"C	EMMCC (EAST MECH RM D131)	70A/3P CB	VIA CONTROLLER BY DIV. 15 CONTRACTOR AND 100A, 208V, 3PH DISC. SW BY DIV. 16 CONTRACTOR
CP-35	CONDENSATE PUMP BLDG. 35 E-9/M-10	2	208V 3PH	3#10, 1#10 GRD-$\frac{3}{4}$"C	N35P	30A/3P CB	VIA CONTROLLER BY DIV. 15 CONTRACTOR AND 30A, 208V, 3PH DISC. SW BY DIV. 16 CONTRACTOR
CP-46	CONDENSATE PUMP BLDG. 46 E-6/M-24	3	208V 3PH	3#10, 1#10 GRD-$\frac{3}{4}$"C	MCC (MENDEL BLDG)	30A/3P CB	VIA CONTROLLER BY DIV. 15 CONTRACTOR AND 30A, 208V, 3PH DISC. SW BY DIV. 16 CONTRACTOR
CP-109	CONDENSATE PUMP BLDG. 109 E-7/M-26	3	208V 3PH	3#10, 1#10 GRD-$\frac{3}{4}$"C	MCC (LAUNDRY BLDG)	30A/3P CB	VIA CONTROLLER BY DIV. 15 CONTRACTOR AND 30A, 208V, 3PH DISC. SW BY DIV. 16 CONTRACTOR
CP-110	CONDENSATE PUMP BLDG. 110 E-8/M-28	3	208V 3PH	3#10, 1#10 GRD-$\frac{3}{4}$"C	MCC (REHAB BLDG)	30A/3P CB	VIA CONTROLLER BY DIV. 15 CONTRACTOR AND 30A, 208V, 3PH DISC. SW BY DIV. 16 CONTRACTOR
EF-11	TUNNEL T26-1 ENLARGEMENT AREA EXHAUST FAN E-4/M-5	$\frac{1}{60}$	120V 1PH	2#10, 1#12 GRD-$\frac{3}{4}$"C	EMDP-P3 DIETARY BUILDING	20A/1P	VIA THERMAL OVERLOAD DISC. SW BY DIV BY DIV. 16 CONTRACTOR. INTER LOCK WIRING WITH LOUVER MOTOR BY DIV. 15 CONTRACTOR
EF-12	EXHAUST FAN BLDG. #67, E-16/M-37	$\frac{1}{4}$	120V 1PH	2#12, 1#12 GRD-$\frac{3}{4}$"C	LP-C	20A/1P	VIA THERMAL OVERLOAD DISC. SW BY DIV BY DIV. 16 CONTRACTOR.
SP-1	ENLARGEMENT AREA #20 SHT. E-15/M-1	$\frac{1}{2}$	120V 1PH	2#10, 1#12 GRD-$\frac{3}{4}$"C	N-1A IN FORENSIC TREATMENT BLDG.#26	20A/1P	INSTALL DUPLEX RECEPTACLE TO MATCH WITH SUMP PUMP CORD PLUG. VERIFY LOCATION AND TYPE OF PLUG
SP-2	ENLARGEMENT AREA #16 SHT. E-14/M-2	$\frac{1}{2}$	120V 1PH	2#10, 1#12 GRD-$\frac{3}{4}$"C	PDP-PR IN BSMT OF ACUTE TREATMENT BLDG.#27	20A/1P	INSTALL DUPLEX RECEPTACLE TO MATCH WITH SUMP PUMP CORD PLUG. VERIFY LOCATION AND TYPE OF PLUG
SP-3	ENLARGEMENT AREA #14 SHT. E-14/M-2	$\frac{1}{2}$	120V 1PH	2#10, 1#12 GRD-$\frac{3}{4}$"C	BRP IN BURR BLDG.#15	20A/1P	INSTALL DUPLEX RECEPTACLE TO MATCH WITH SUMP PUMP CORD PLUG. VERIFY LOCATION AND TYPE OF PLUG
SP-4	ENLARGEMENT AREA #12 SHT. E-14/M-2	$\frac{1}{2}$	120V 1PH	2#10, 1#12 GRD-$\frac{3}{4}$"C	BRP IN BURR BLDG.#15	20A/1P	INSTALL DUPLEX RECEPTACLE TO MATCH WITH SUMP PUMP CORD PLUG. VERIFY LOCATION AND TYPE OF PLUG
SP-5	ENLARGEMENT AREA #10 SHT. E-14/M-2	$\frac{1}{2}$	120V 1PH	2#10, 1#12 GRD-$\frac{3}{4}$"C	BRP IN BURR BLDG.#15	20A/1P	INSTALL DUPLEX RECEPTACLE TO MATCH WITH SUMP PUMP CORD PLUG. VERIFY LOCATION AND TYPE OF PLUG
SP-6	ENLARGEMENT AREA #8 SHT. E-14/M-2	$\frac{1}{2}$	120V 1PH	2#10, 1#12 GRD-$\frac{3}{4}$"C	BRP IN BURR BLDG.#15	20A/1P	INSTALL DUPLEX RECEPTACLE TO MATCH WITH SUMP PUMP CORD PLUG. VERIFY LOCATION AND TYPE OF PLUG
SP-7	ENLARGEMENT AREA #25 SHT. E-14/M-2	$\frac{1}{2}$	120V 1PH	2#10, 1#12 GRD-$\frac{3}{4}$"C	BP-1 IN BOILER HOUSE	20A/1P	INSTALL DUPLEX RECEPTACLE TO MATCH WITH SUMP PUMP CORD PLUG. VERIFY LOCATION AND TYPE OF PLUG
SP-8	ENLARGEMENT AREA #18 SHT. E-15/M-2	$\frac{1}{2}$	120V 1PH	2#10, 1#12 GRD-$\frac{3}{4}$"C	EM IN WHITE BLDG.#26	20A/1P	INSTALL DUPLEX RECEPTACLE TO MATCH WITH SUMP PUMP CORD PLUG. VERIFY LOCATION AND TYPE OF PLUG
FWH-1	FAN WALL HEATER, BLDG. 109, SHT. E-20/M-25	1.5	120V 1PH	2#10, 1#12 GRD-$\frac{3}{4}$"C	NEW PANEL 109-PP-1	20A/1P	VIA 20A/2P DISCONNECT SWITCH
FWH-2	FAN WALL HEATER, BLDG. 109, SHT. E-20/M-25	1.5	120V 1PH	2#10, 1#12 GRD-$\frac{3}{4}$"C	NEW PANEL 109-PP-1	20A/1P	VIA 20A/2P DISCONNECT SWITCH
FWH-3	FAN WALL HEATER, BLDG. 109, SHT. E-20/M-25	1.5	120V 1PH	2#10, 1#12 GRD-$\frac{3}{4}$"C	NEW PANEL 109-PP-1	20A/1P	VIA 20A/2P DISCONNECT SWITCH
FWH-4	FAN WALL HEATER, BLDG. 109, SHT. E-20/M-25	1.5	120V 1PH	2#10, 1#12 GRD-$\frac{3}{4}$"C	NEW PANEL 109-PP-1	20A/1P	VIA 20A/2P DISCONNECT SWITCH
FWH-5	FAN WALL HEATER, BLDG. 109, SHT. E-20/M-25	1.5	120V 1PH	2#10, 1#12 GRD-$\frac{3}{4}$"C	NEW PANEL 109-PP-1	20A/1P	VIA 20A/2P DISCONNECT SWITCH
FWH-6	FAN WALL HEATER, BLDG. 109, SHT. E-20/M-25	1.5	120V 1PH	2#10, 1#12 GRD-$\frac{3}{4}$"C	NEW PANEL 109-PP-1	20A/1P	VIA 20A/2P DISCONNECT SWITCH
VP-1	VACUUM PUMP, BLDG. 109, SHT. E-20/M-25	$\frac{3}{4}$	120V	2#10, 1#12 GRD-$\frac{3}{4}$"C	NEW PANEL 109-PP-1	30A/1P	VIA CONTROL PANEL BY DIVISION 15,CONTRACTOR AND THERMAL OVERLOAD DISCONNECT SWITCH
VP-2	VACUUM PUMP, BLDG. 109, SHT. E-20/M-25	$\frac{3}{4}$	120V	2#10, 1#12 GRD-$\frac{3}{4}$"C	NEW PANEL 109-PP-1	30A/1P	VIA CONTROL PANEL BY DIVISION 15,CONTRACTOR ANDTHERMAL OVERLOAD DISCONNECT SWITCH
VP-3	VACUUM PUMP, BLDG. 109, SHT. E-20/M-25	$\frac{3}{4}$	120V	2#10, 1#12 GRD-$\frac{3}{4}$"C	NEW PANEL 109-PP-1	30A/1P	VIA CONTROL PANEL BY DIVISION 15,CONTRACTOR ANDTHERMAL OVERLOAD DISCONNECT SWITCH
VP-4	VACUUM PUMP, BLDG. 109, SHT. E-20/M-25	$\frac{3}{4}$	120V	2#10, 1#12 GRD-$\frac{3}{4}$"C	NEW PANEL 109-PP-1	30A/1P	VIA CONTROL PANEL BY DIVISION 15,CONTRACTOR ANDTHERMAL OVERLOAD DISCONNECT SWITCH
VP-5	VACUUM PUMP, BLDG. 109, SHT. E-20/M-25	$\frac{3}{4}$	120V	2#10, 1#12 GRD-$\frac{3}{4}$"C	NEW PANEL 109-PP-1	30A/1P	VIA CONTROL PANEL BY DIVISION 15,CONTRACTOR ANDTHERMAL OVERLOAD DISCONNECT SWITCH
VP-6	VACUUM PUMP, BLDG. 109, SHT. E-20/M-25	$\frac{3}{4}$	120V	2#10, 1#12 GRD-$\frac{3}{4}$"C	NEW PANEL 109-PP-1	30A/1P	VIA CONTROL PANEL BY DIVISION 15,CONTRACTOR ANDTHERMAL OVERLOAD DISCONNECT SWITCH
VP-7	VACUUM PUMP, BLDG. 109, SHT. E-20/M-25	$\frac{3}{4}$	120V	2#10, 1#12 GRD-$\frac{3}{4}$"C	NEW PANEL 109-PP-1	30A/1P	VIA CONTROL PANEL BY DIVISION 15,CONTRACTOR AND THERMAL OVERLOAD DISCONNECT SWITCH
VP-8	VACUUM PUMP, BLDG. 109, SHT. E-21/M-26	$\frac{3}{4}$	120V	2#10, 1#12 GRD-$\frac{3}{4}$"C	NEW PANEL 109-PP-1	30A/1P	VIA CONTROL PANEL BY DIVISION 15,CONTRACTOR AND THERMAL OVERLOAD DISCONNECT SWITCH
VP-9	VACUUM PUMP, BLDG. 109, SHT. E-21/M-26	$\frac{3}{4}$	120V	2#10, 1#12 GRD-$\frac{3}{4}$"C	NEW PANEL 109-PP-1	30A/1P	VIA CONTROL PANEL BY DIVISION 15,CONTRACTOR AND THERMAL OVERLOAD DISCONNECT SWITCH
BFP-1 & 2	BOILER FEED PUMP, BLDG 46, SHT. E-19/M-24	$\frac{1}{3}$	120V 1PH	2#10, 1#12 GRD-$\frac{3}{4}$"C	NEW PANEL 46-PP-1	25A/1P	VIA CONTROL PANEL BY DIVISION 15,CONTRACTOR AND DISCONNECT SWITCH
EF-1	EXHAUST FAN, BLDG.#46		120V 1PH	2#12, 1#12 GRD-$\frac{3}{4}$"C	NEW PANEL 46-PP-1	20A/1P	VIA CONTROL PANEL BY DIVISION 15,CONTRACTOR AND DISCONNECT SWITCH
CHP-1	CHEMICAL PUMP, BLDG. #46, SHT. E-19/M-24		120V 1PH	2#12, 1#12 GRD-$\frac{3}{4}$"C	NEW PANEL 46-PP-1	20A/1P	PLUG AND CORD EQUIPMENT PROVIDE GFI/WP MATCHING RECEPTACLE
WS-1	WATER SOFTENER, BLDG. #46, E-21/M-24		120V 1PH	2#12, 1#12 GRD-$\frac{3}{4}$"C	NEW PANEL 46-PP-1	20A/1P	PLUG AND CORD EQUIPMENT PROVIDE GFI/WP MATCHING RECEPTACLE

* SEE DWG. E-16 AND DWG. E-18 FOR WIRING DETAILS OF MECHANICAL EQUIPMENT IN ADMINISTRATIVE BLDG. #67

AS BUILT

DATE: FEBRUARY 3, 2003

REVISIONS			DRAWN	PREPARED
NO.	DATE	REMARKS	GGL	RP/TMK
			TRACED	APPROVED
			CHECKED	APPROVED

SEAL

STV Incorporated
engineers/architects/planners/scientists/construction managers
70 W. MADISON ST. SUITE 2840 CHICAGO, IL 60602

CAPITAL DEVELOPMENT BOARD

State of Illinois
George H. Ryan, Governor

ELECTRICAL
SYMBOL LIST, NOTES, ABBREVIATION LIST, EQUIPMENT CONNECTION SCHEDULE

ELGIN MENTAL HEALTH CENTER
750 SOUTH STATE STREET
ELGIN, ILLINOIS 60123

CDB PROJECT NO: 321-055-097 PH-2
DATE: FEBRUARY 3, 2003
SHEET NO: E-1
OF SHEETS

I:#PROJECTS#1642#EPHASE1#E01.DGN

I:\PROJECTS\1642\Ephase1\E01.DGN 02/04/2003 10:21:46 AM

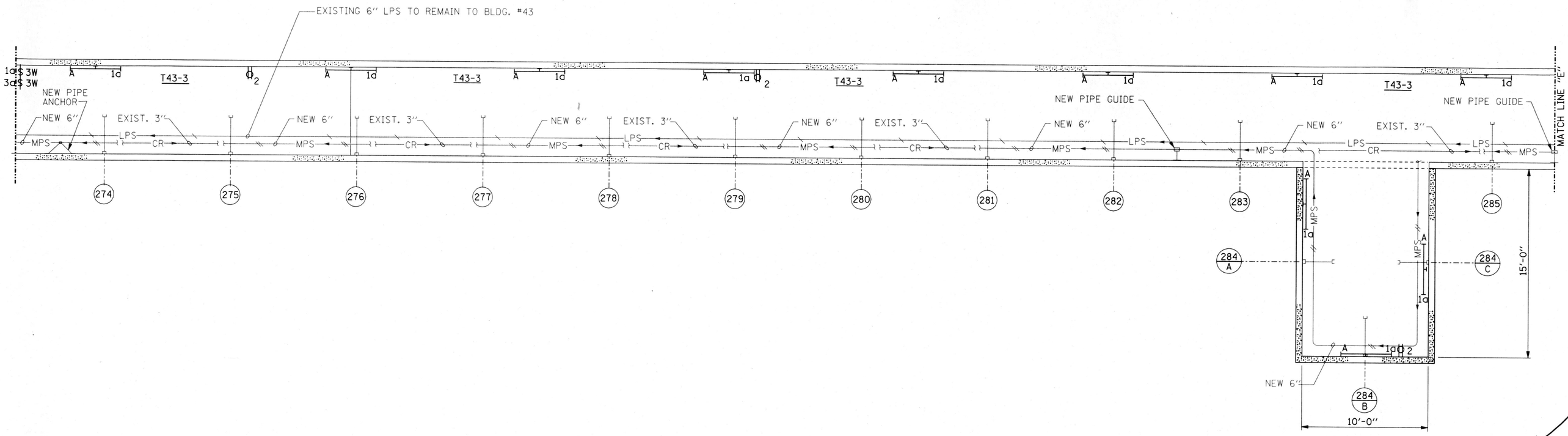

N.I.C.

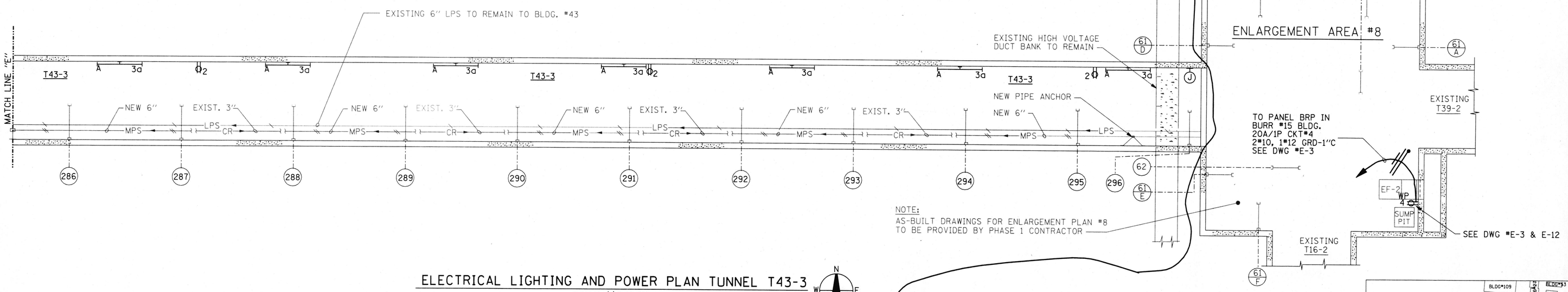

ELECTRICAL LIGHTING AND POWER PLAN TUNNEL T43-3

SCALE: 1/4"=1'-0"

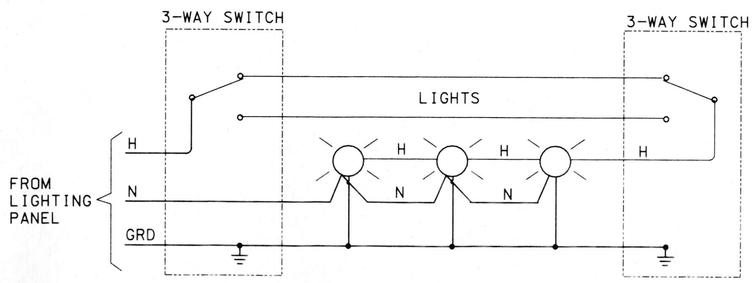

3-WAY SWITCH LIGHTING CONTROL DIAGRAM

N.T.S.

AS BUILT

DATE: FEBRUARY 3, 2003

N.I.C.

NOTES:

1. REFER TO DWG. E-1 FOR SYMBOL LIST, AND GENERAL NOTES, RENOVATION NOTES, AND MECHANICAL EQUIPMENT ELECTRICAL CONNECTION SCHEDULE.
2. REFER TO DWG. E-3 FOR LIGHTING FIXTURE SCHEDULE

REFERENCE DRAWINGS:

M-13 NEW PIPING ARRANGEMENTS TUNNEL T43-3

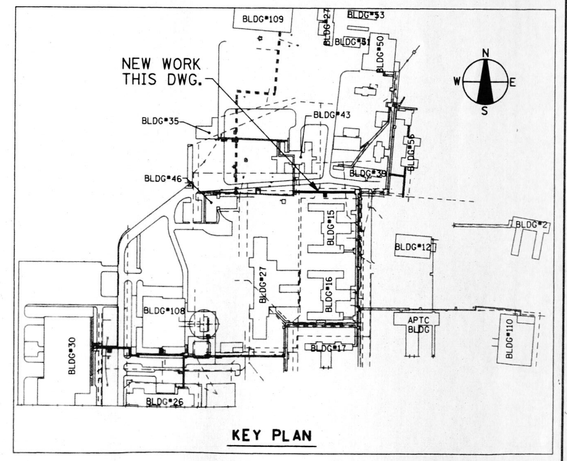

KEY PLAN

REVISIONS			DRAWN	PREPARED	SEAL
NO.	DATE	REMARKS	GGL		
			TRACED	APPROVED	
			CHECKED	APPROVED	

STV Incorporated
engineers/architects/planners/scientists/construction managers
70 W. MADISON ST. SUITE 2840 CHICAGO, IL 60602

CAPITAL DEVELOPMENT BOARD

State of Illinois
George H. Ryan, Governor

TUNNEL AND STEAM PIPING RENOVATIONS
ELECTRICAL LIGHTING AND POWER PLAN
TUNNEL T43-3

ELGIN MENTAL HEALTH CENTER
750 SOUTH STATE STREET
ELGIN, ILLINOIS 60123

CDB PROJECT NO: 321-055-097 PH-2
DATE: FEBRUARY 3, 2003
SHEET NO: E-2
OF SHEETS

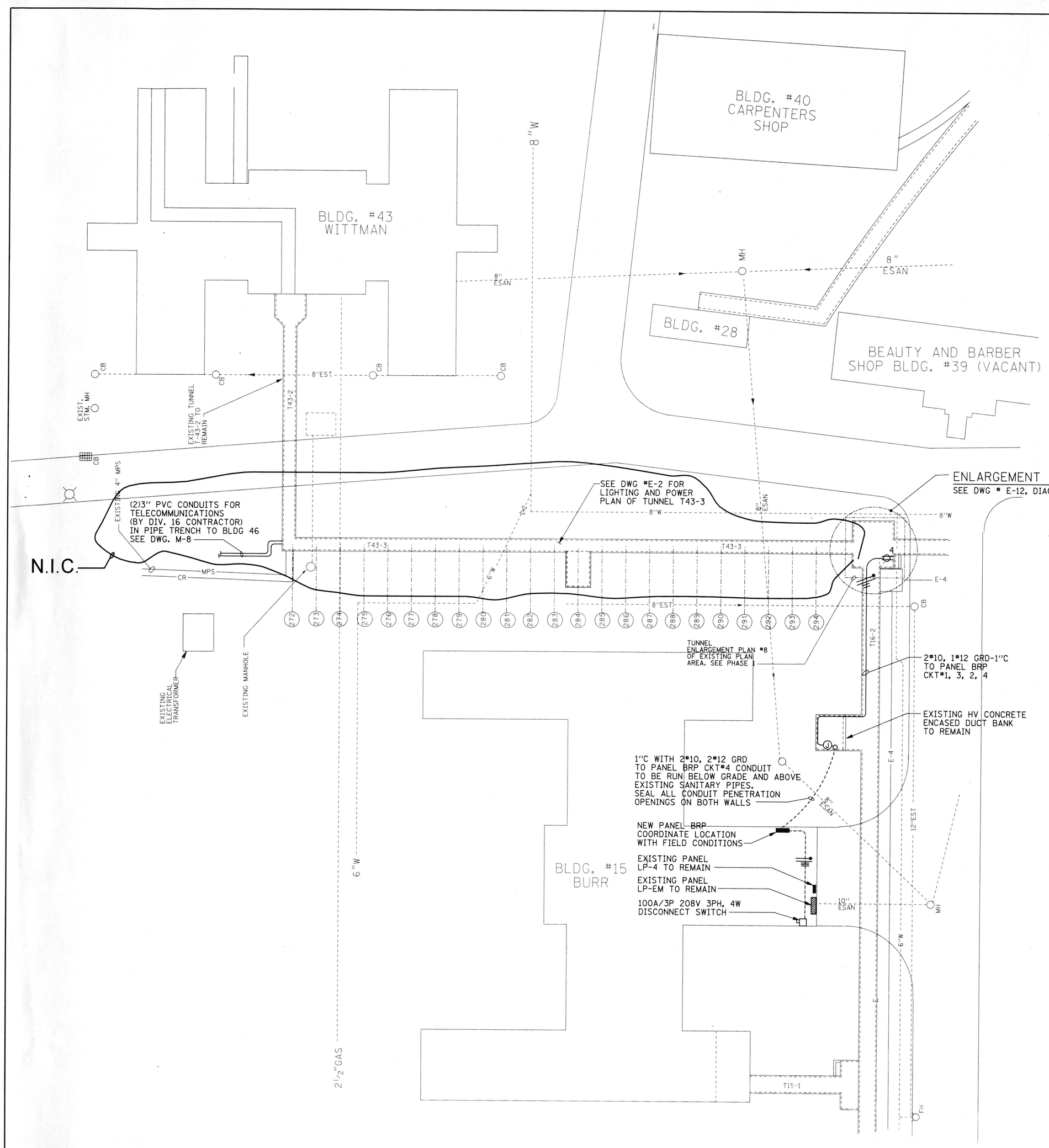

PARTIAL SITE POWER PLAN

SCALE: 1"=20'-0"

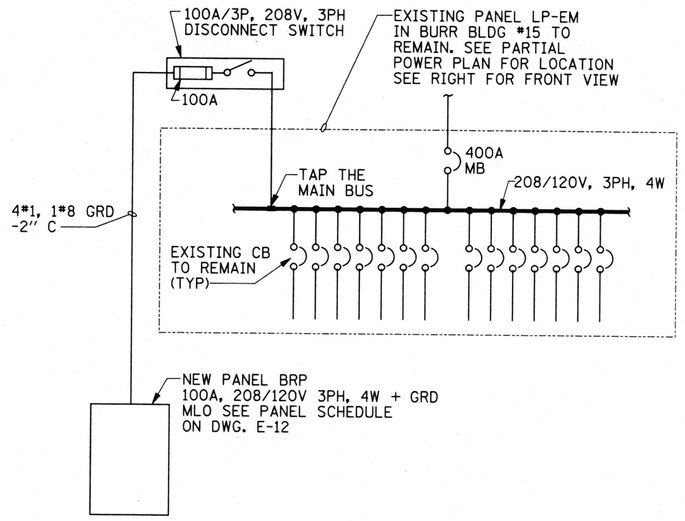

PARTIAL POWER DISTRIBUTION DIAGRAM

SCALE: NONE

LR-1 100A/3PCB	LR-2 100A/3PCB
ATS NORMAL 60A/3P	DRYER 30A/3P
20A/2P SPARE	1P SPACE
220V RANGE 40A/2P	COND P-1 20A/3P
LP-4 40A/3P	LP-2 60A/3P
LP-1 60A/3P	LP-3 KITCHEN
DISPOSAL 40A/3P	MCC 100A/3P
BLANK	MB 400A/3P

FRONT VIEW OF EXISTING PANEL LP-EM (BASEMENT)

SCALE: NONE

N.I.C.

LIGHTING FIXTURE SCHEDULE

TYPE	DESCRIPTION AND MANUFACTURER CATALOG #	VOLTAGE	LAMPS	REMARKS
A	4'-0" TWO LAMP WALL SURFACE MTD LIGHT FIXTURE WITH DIE FORMED HEAVY GAUGE STEEL AND, ELECTRONIC BALLAST AND T8 OCTRON LAMPS HASCO #WD66T 4-20CT32-WMB-LEX-120V OR GUTH #ES-7531-120V-2320CT-ELEC-OCT-W/LEXAN LENS OR LUX #753-2320CT-E0-LX-LENS-SPEC	120	(2) 32/T8	FIXTURE SHALL BE FURNISHED WITH ALL REQUIRED MOUNTING HARDWARE, LAMPS AND BALLAST

NOTES:

1. REFER TO DWG. E-1 FOR SYMBOL LIST, AND GENERAL NOTES, RENOVATION NOTES, AND MECHANICAL EQUIPMENT ELECTRICAL CONNECTION SCHEDULE.
2. REFER TO DWG. E-12 FOR PANEL SCHEDULE.

REFERENCE DRAWINGS:

M-2 PARTIAL SITE PLAN - SOUTH SECTION

M-8 NEW UNDERGROUND PIPING CONDUIT SYSTEM BUILDING #46 (BY DIV. 16 CONTRACTOR)

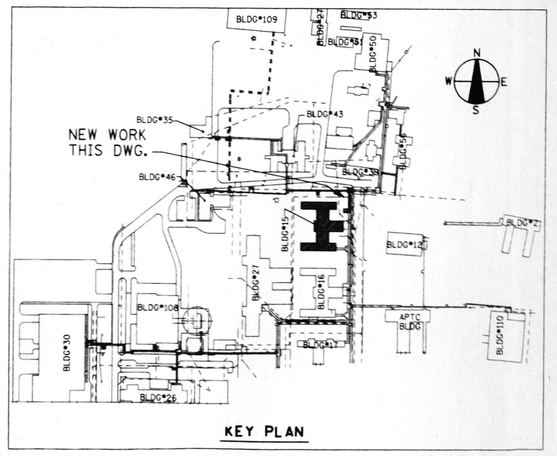

AS BUILT

DATE: FEBRUARY 3, 2003

REVISIONS NO.	DATE	REMARKS	DRAWN	PREPARED
			GGL	
			TRACED	APPROVED
			CHECKED	APPROVED

SEAL

STV Incorporated
engineers/architects/planners/scientists/construction managers
70 W. MADISON ST. SUITE 2840 CHICAGO, IL 60602

CAPITAL DEVELOPMENT BOARD

State of Illinois
George H. Ryan, Governor

TUNNEL AND STEAM PIPING RENOVATIONS
PARTIAL SITE - SOUTH SECTION
POWER PLAN & DISTRIBUTION DIAGRAM

ELGIN MENTAL HEALTH CENTER
750 SOUTH STATE STREET
ELGIN, ILLINOIS 60123

CDB PROJECT NO: 321-055-097 PH-2
DATE: FEBRUARY 3, 2003
SHEET NO: E-3
OF SHEETS

H:\PROJECTS\1642\EPHASE1\E03.DGN

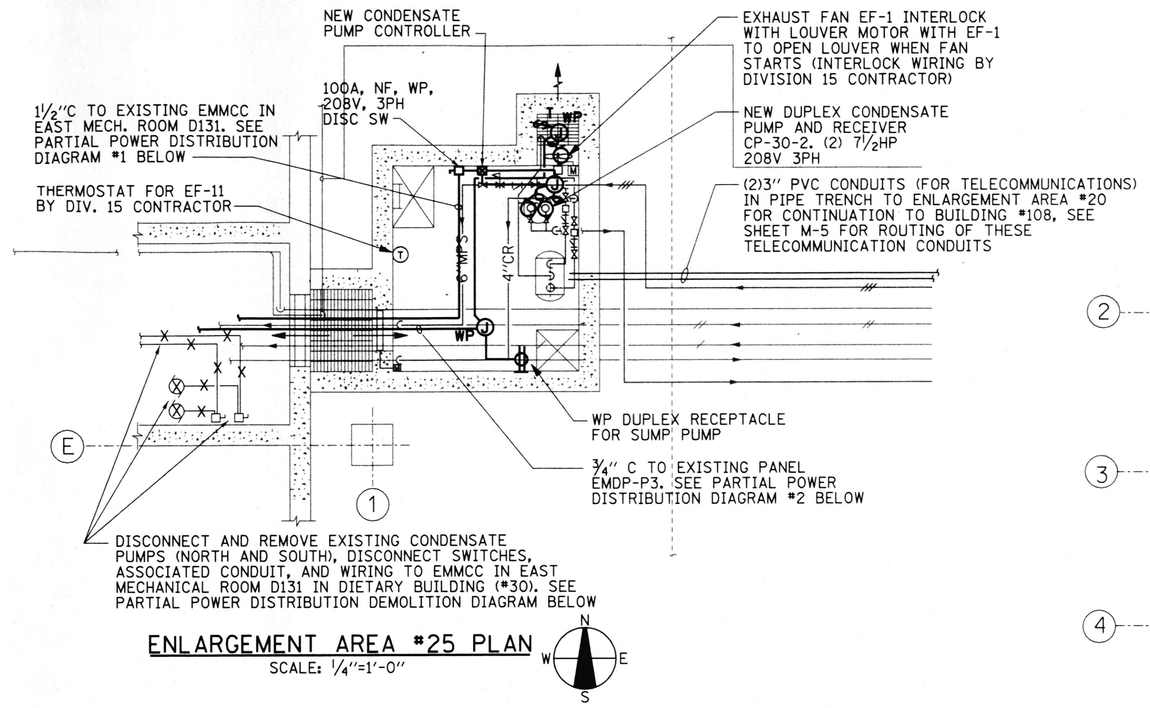

ENLARGEMENT AREA #25 PLAN
SCALE: ¼"=1'-0"

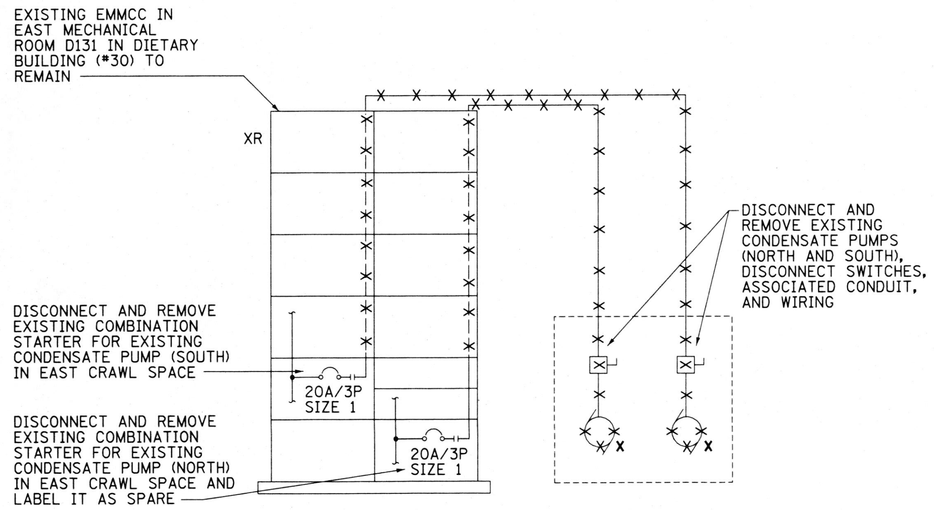

DIETARY BUILDING (#30) - EAST CRAWL SPACE
PARTIAL POWER DISTRIBUTION
DEMOLITION DIAGRAM
NO SCALE

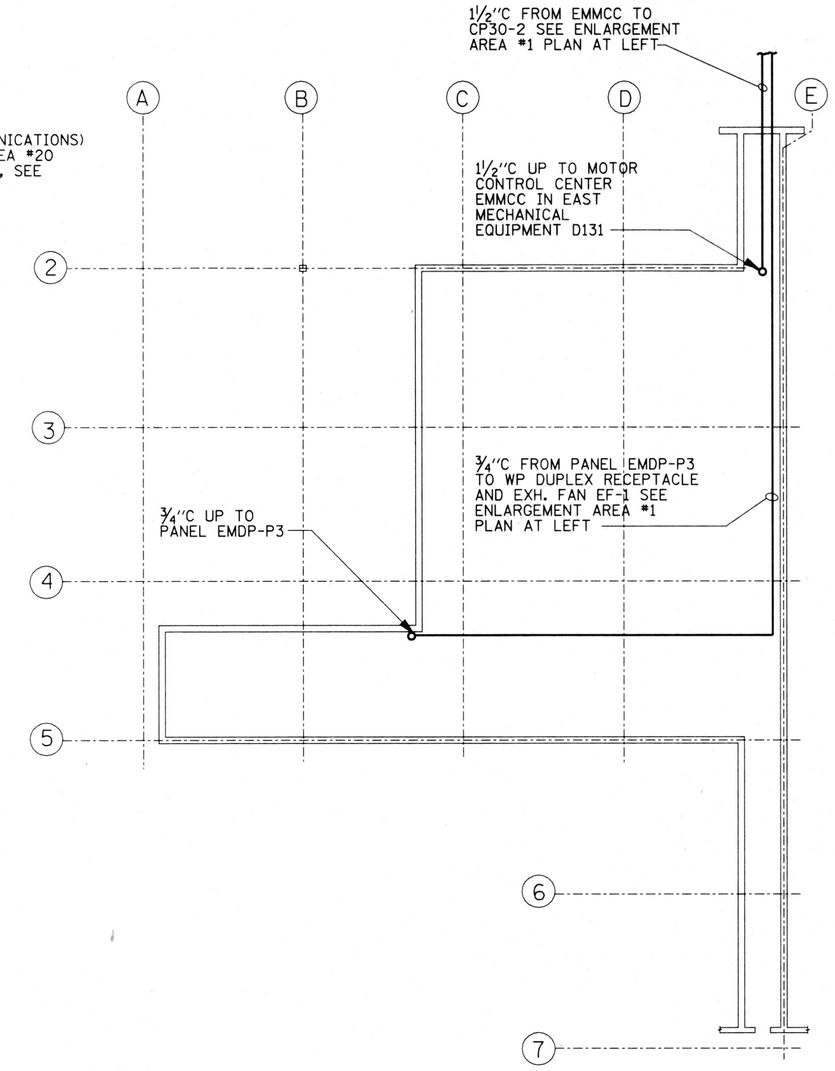

DIETARY BUILDING (#30) CRAWL SPACE PLAN
NO SCALE

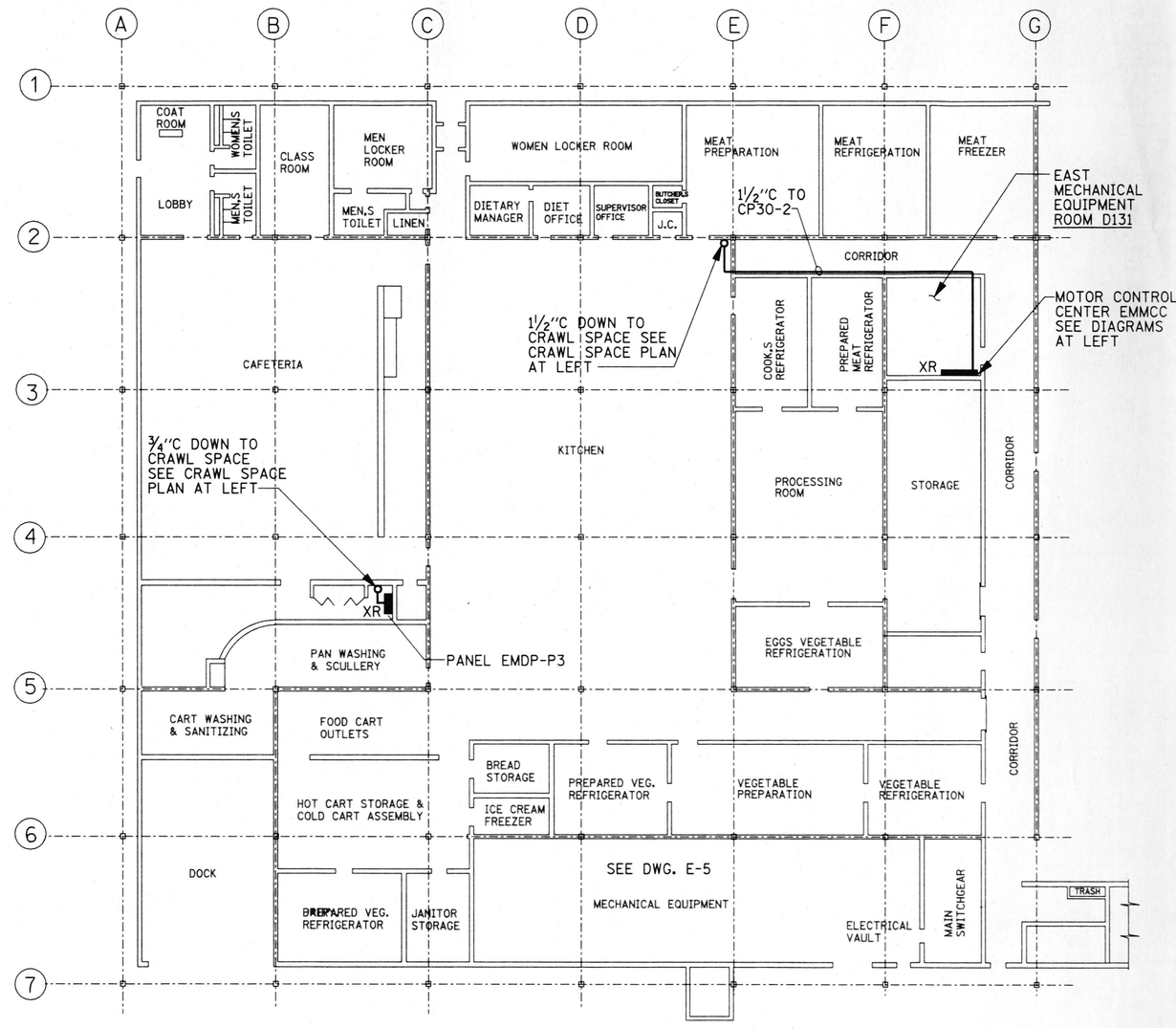

DIETARY BUILDING (#30) - FLOOR PLAN
NORTH SECTION
NO SCALE

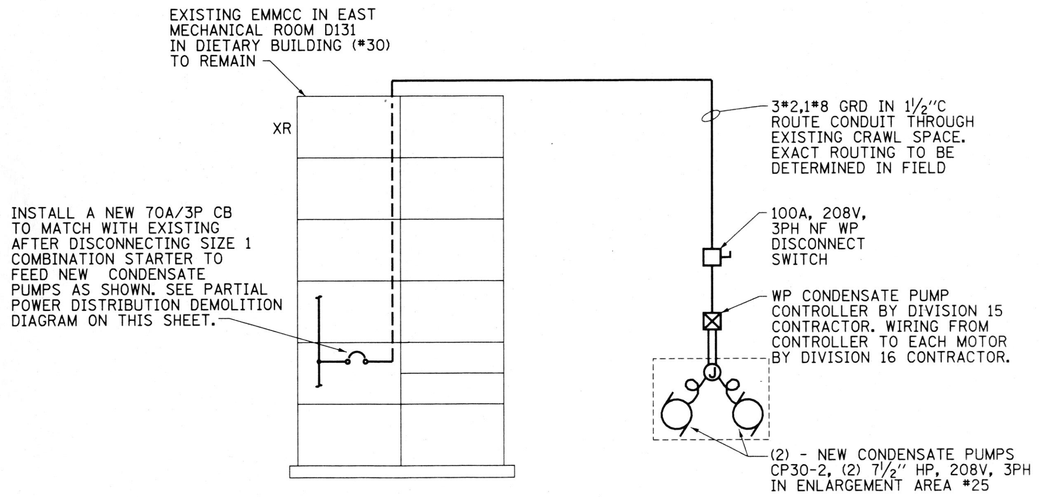

DIETARY BUILDING (#30) - EAST CRAWL SPACE
PARTIAL POWER DISTRIBUTION DIAGRAM #1
NO SCALE

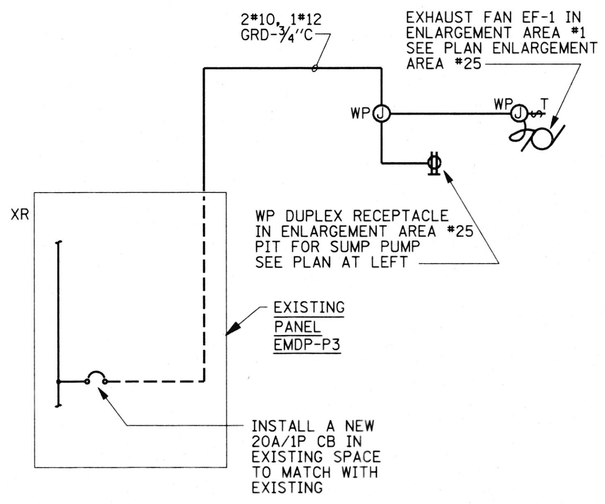

DIETARY BUILDING (#30) - EAST CRAWL SPACE
PARTIAL POWER DISTRIBUTION DIAGRAM #2
NO SCALE

NOTES:

1. REFER TO DWG. E-1 FOR SYMBOL LIST, AND GENERAL NOTES, RENOVATION NOTES, AND MECHANICAL EQUIPMENT ELECTRICAL CONNECTION SCHEDULE.

REFERENCE DRAWINGS:

- M-5 TUNNEL AND STEAM PIPING RENOVATIONS, NEW PIPING ARRANGEMENT, UNDERGROUND PIPING CONDUIT SYSTEM AND PARTIAL TUNNEL T26-1 (TELECOMMUNICATION CONDUIT ROUTING BY ELECTRICAL CONTRACTOR)
- M-15 EXISTING PIPING & DEMOLITION - BUILDING #30 CRAWL SPACE
- M-17 NEW PIPING - BUILDING #30 CRAWL SPACE
- M-44 EQUIPMENT SCHEDULES
- E-2 FLOOR PLAN NORTH SECTION - POWER CENTRAL DIETARY, STORES, & CLOTHING CENTER DATED 8-12-67, PROJECT #IBA 74-53
- E-4 CRAWL SPACE PLAN, CENTRAL DIETARY STORES AND CLOTHING CENTER DATED 8-12-67, CDB PROJECT #IBA 74-53

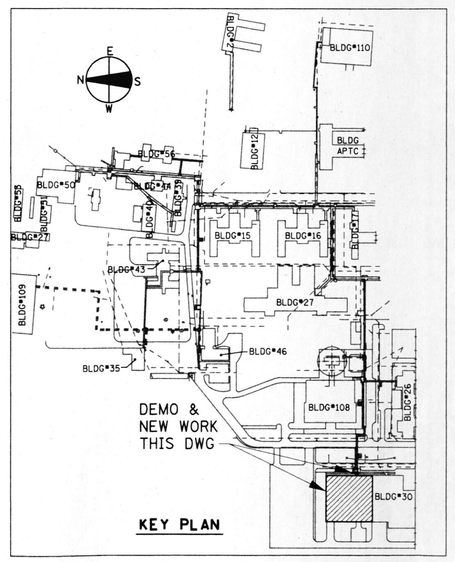

AS BUILT
DATE: FEBRUARY 3, 2003

REVISIONS			DRAWN	PREPARED
NO.	DATE	REMARKS	GGL	
			TRACED	APPROVED
			CHECKED	APPROVED

SEAL

STV Incorporated
engineers/architects/planners/scientists/construction managers
70 W. MADISON ST. SUITE 2840 CHICAGO, IL 60602

CAPITAL DEVELOPMENT BOARD

State of Illinois
George H. Ryan, Governor

TUNNEL AND STEAM PIPING RENOVATIONS
DIETARY BLDG AND TUNNEL T26-1 AND
ENLARGEMENT AREA #25 - PLANS AND DIAGRAMS

ELGIN MENTAL HEALTH CENTER
750 SOUTH STATE STREET
ELGIN, ILLINOIS 60123

CDB PROJECT NO: 321-055-097 PH-2
DATE: FEBRUARY 3, 2003
SHEET NO: E-4
OF SHEETS

h:\PROJECTS\1642\EPHASE1\E04.DGN

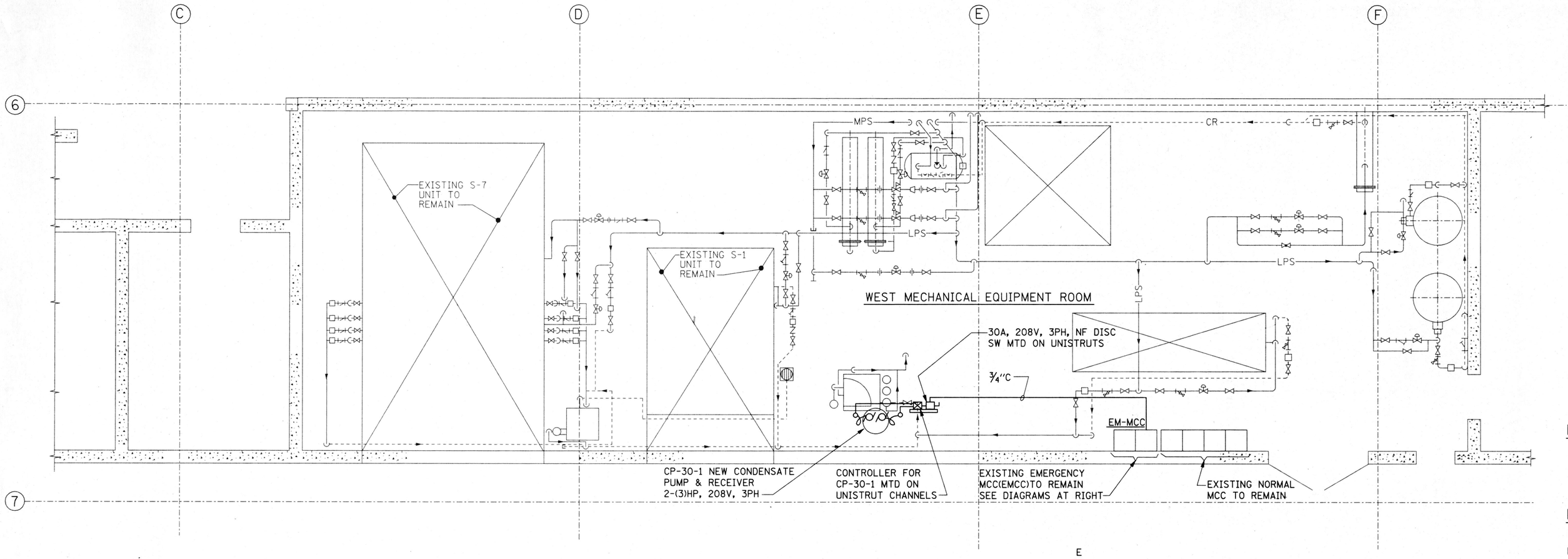

DIETARY BUILDING (#30) WEST MECHANICAL EQUIPMENT ROOM ELECTRICAL PLAN

SCALE: 1/4"=1'-0"

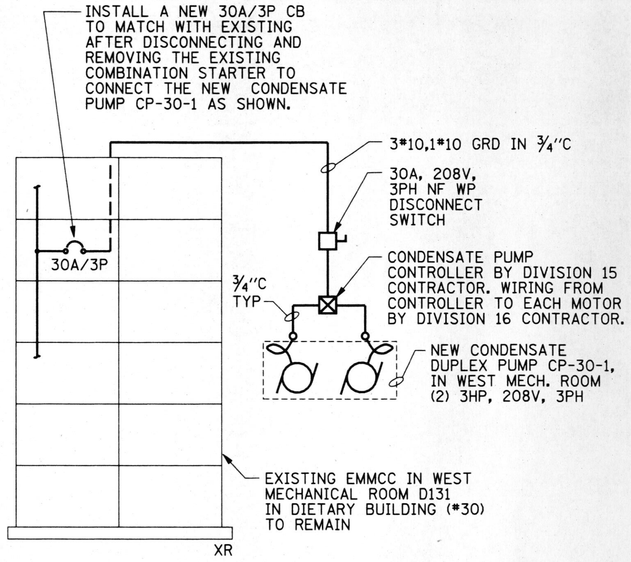

PARTIAL POWER DISTRIBUTION DIAGRAM
DIETARY BUILDING (#30) - WEST MECHANICAL ROOM

NO SCALE

NOTES:

1. REFER TO DWG. E-1 FOR SYMBOL LIST, AND GENERAL NOTES, RENOVATION NOTES, AND MECHANICAL EQUIPMENT ELECTRICAL CONNECTION SCHEDULE.

REFERENCE DRAWINGS:

M-16 EXISTING PIPING & DEMOLITION - BUILDING #30 EQUIPMENT ROOM PLAN

M-18 NEW PIPING & MECHANICAL EQUIPMENT ROOM PLAN - BUILDING #30

M-44 EQUIPMENT SCHEDULES

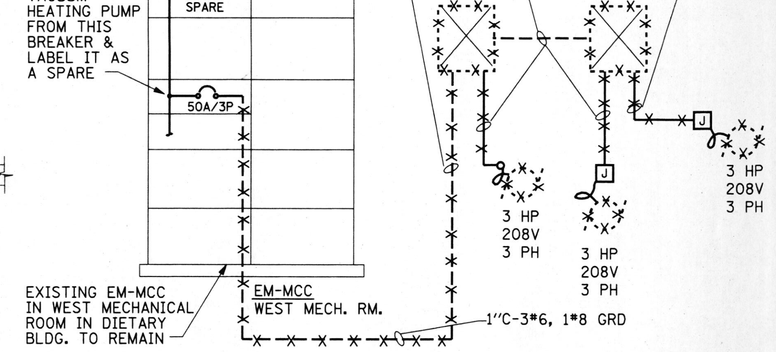

PARTIAL POWER DISTRIBUTION DEMOLITION DIAGRAM
DIETARY BUILDING (#30) - WEST MECHANICAL ROOM

NO SCALE

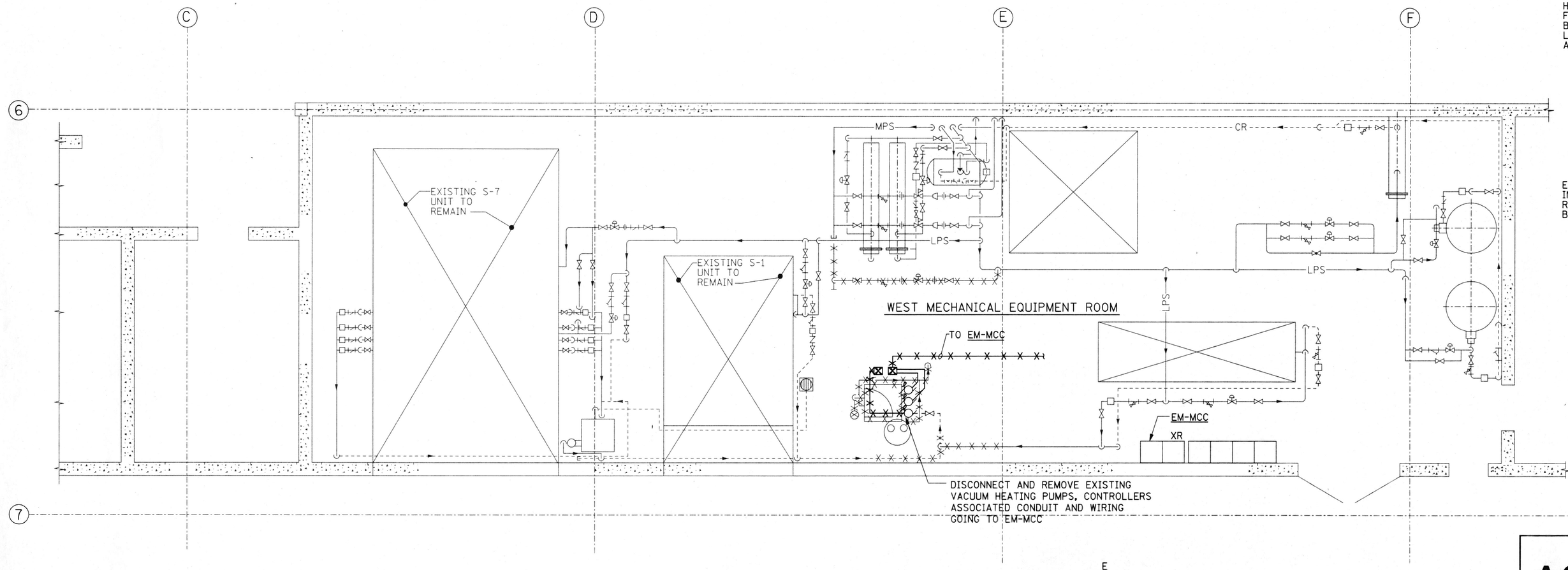

DIETARY BUILDING (#30) WEST MECHANICAL EQUIPMENT ROOM ELECTRICAL DEMOLITION PLAN

SCALE: 1/4"=1'-0"

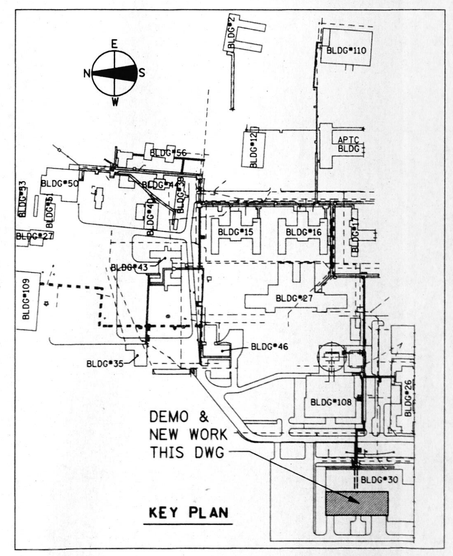

AS BUILT

DATE: FEBRUARY 3. 2003

REVISIONS			DRAWN	PREPARED
NO.	DATE	REMARKS	GGL	
			TRACED	APPROVED
			CHECKED	APPROVED

SEAL: ROSLYN J. VAUGHAN 37235 REGISTERED PROFESSIONAL ENGINEER ILLINOIS

STV Incorporated
engineers/architects/planners/scientists/construction managers
70 W. MADISON ST. SUITE 2840 CHICAGO, IL 60602

CAPITAL DEVELOPMENT BOARD

State of Illinois
George H. Ryan, Governor

TUNNEL AND STEAM PIPING RENOVATIONS
DIETARY BUILDING (#30) WEST MECHANICAL EQUIP. RM. ELECTRICAL & DEMOLITION PLANS

ELGIN MENTAL HEALTH CENTER
750 SOUTH STATE STREET
ELGIN, ILLINOIS 60123

CDB PROJECT NO: 321-055-097 PH-2

DATE: FEBRUARY 3. 2003

SHEET NO: E-5

OF SHEETS

\PROJECTS\1842\phase1\E05.DGN 02/04/2003 10:50:19 AM

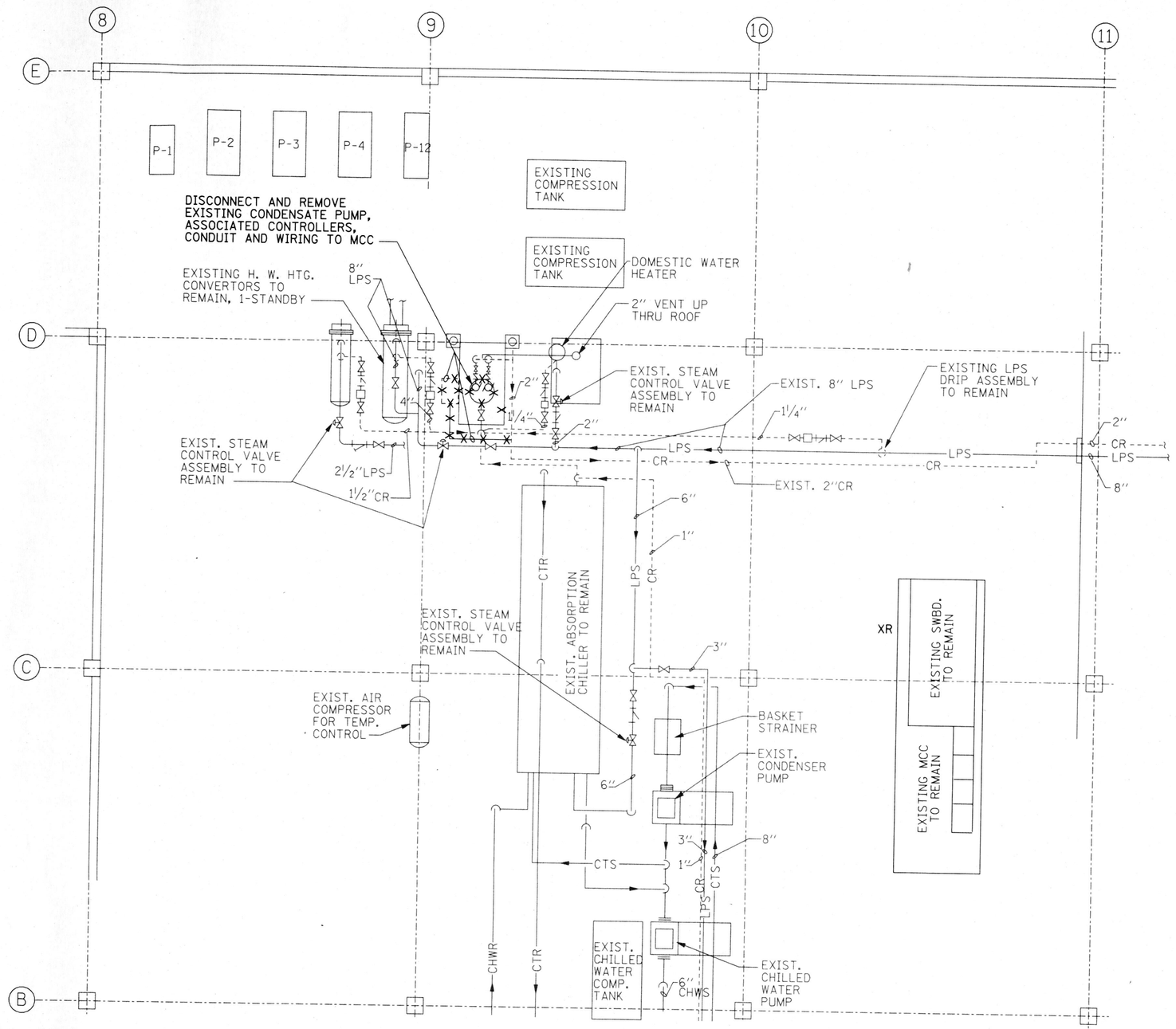

REHAB BUILDING #110 PARTIAL EQUIPMENT ROOM ELECTRICAL DEMOLITION PLAN

SCALE: 1/4"=1'-0"

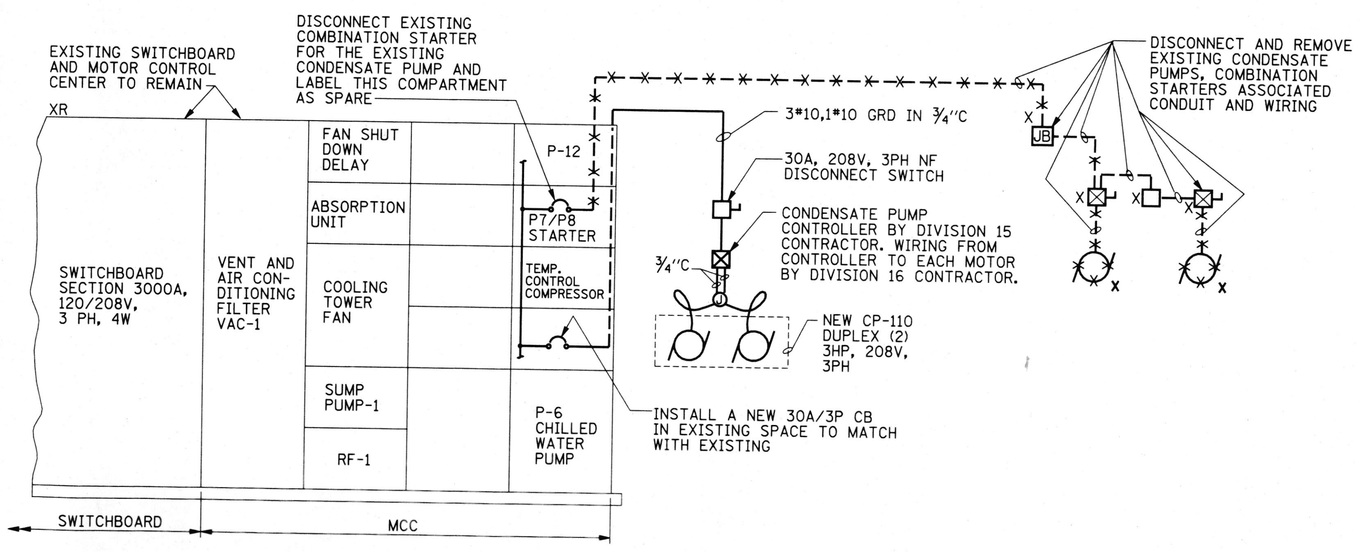

PARTIAL POWER DISTRIBUTION DIAGRAM - REHAB BUILDING #110

NO SCALE

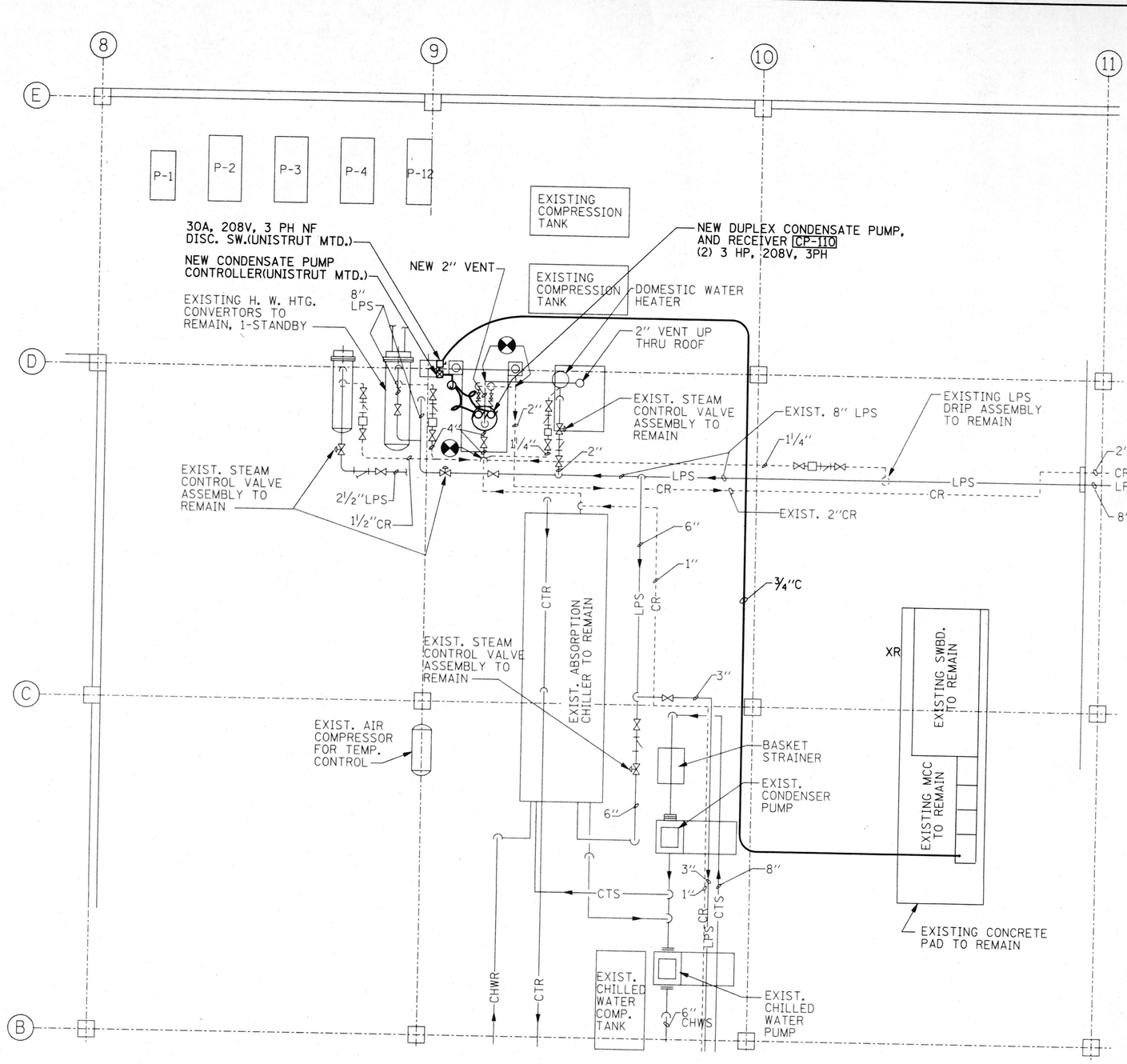

REHAB BUILDING #110 PARTIAL EQUIPMENT ROOM ELECTRICAL PLAN

SCALE: 1/4"=1'-0"

NOTES:

1. REFER TO DWG. E-1 FOR SYMBOL LIST, AND GENERAL NOTES, RENOVATION NOTES, AND MECHANICAL EQUIPMENT ELECTRICAL CONNECTION SCHEDULE.

REFERENCE DWGS:

M-27 EXISTING PIPING AND DEMOLITION - BUILDING #110
M-28 NEW PIPING AND MECHANICAL EQUIPMENT ROOM PLAN - BUILDING #110
M-44 EQUIPMENT SCHEDULES

AS BUILT

DATE: FEBRUARY 3, 2003

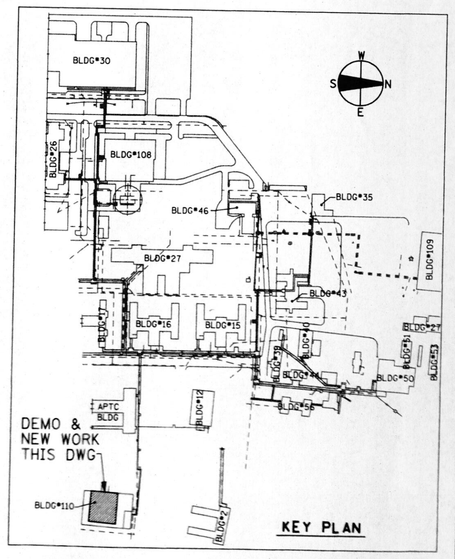

REVISIONS			DRAWN	PREPARED
NO.	DATE	REMARKS	GGL	
			TRACED	APPROVED
			CHECKED	APPROVED

SEAL: JOSEPH J. VAIDYAN, 37285, REGISTERED PROFESSIONAL ENGINEER, STATE OF ILLINOIS, 11-30-04

STV Incorporated
engineers/architects/planners/scientists/construction managers
70 W. MADISON ST. SUITE 2840 CHICAGO, IL 60602

CAPITAL DEVELOPMENT BOARD

State of Illinois
George H. Ryan, Governor

TUNNEL AND STEAM PIPING RENOVATIONS
REHAB BLDG. #110 PARTIAL MECH. EQUIPMENT ROOM ELECTRICAL & DEMOLITION PLANS

ELGIN MENTAL HEALTH CENTER
750 SOUTH STATE STREET
ELGIN, ILLINOIS 60123

CDB PROJECT NO: 321-055-097 PH-2
DATE: FEBRUARY 3, 2003
SHEET NO: E-8
OF SHEETS

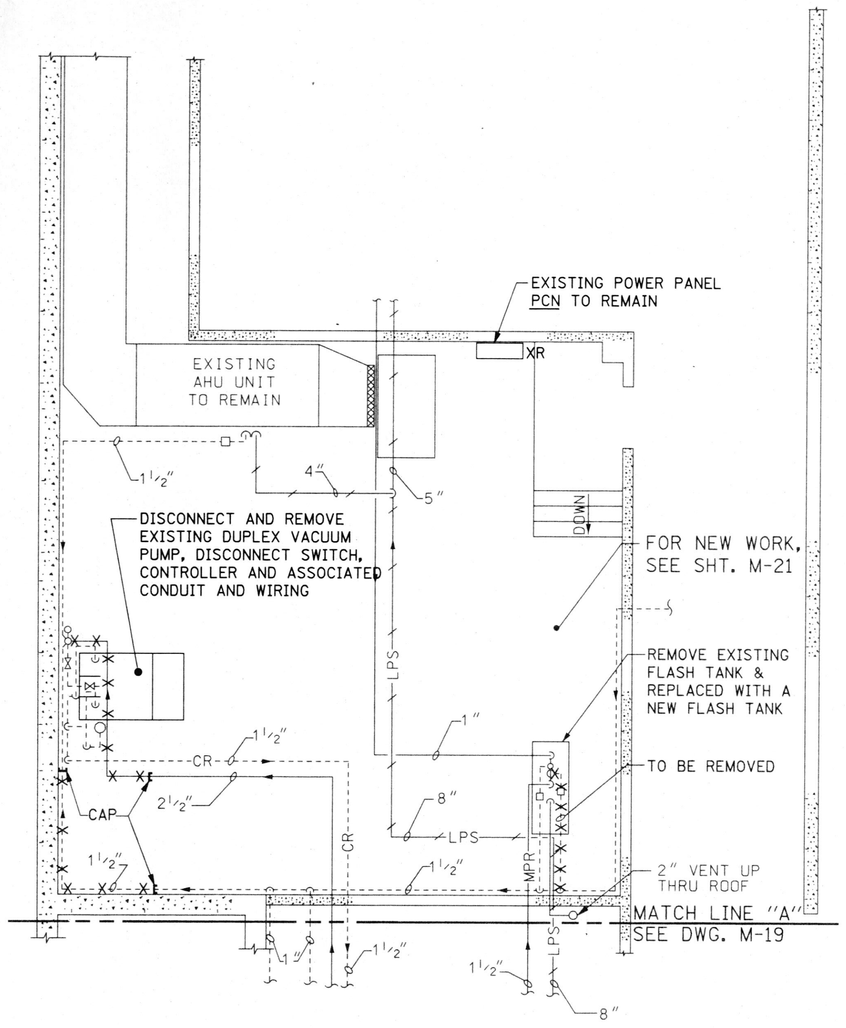

ELECTRICAL DEMOLITION PLAN
MECHANICAL EQUIPMENT ROOM NORTH BUILDING #26 (FORENSIC BLDG.)
BASEMENT LEVEL
SCALE: 1/4"=1'-0"

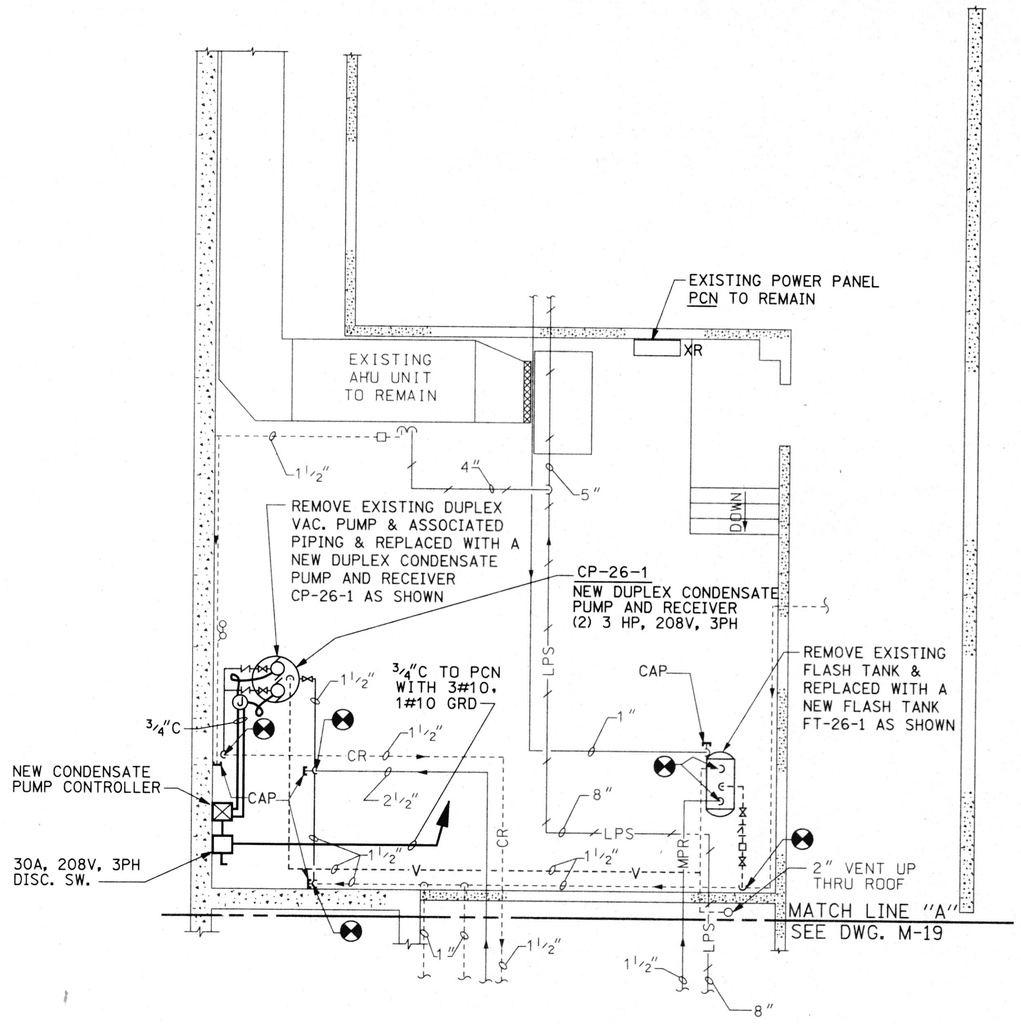

ELECTRICAL PLAN
MECHANICAL EQUIPMENT ROOM NORTH BUILDING #26 (FORENSIC BLDG.)
BASEMENT LEVEL
SCALE: 1/4"=1'-0"

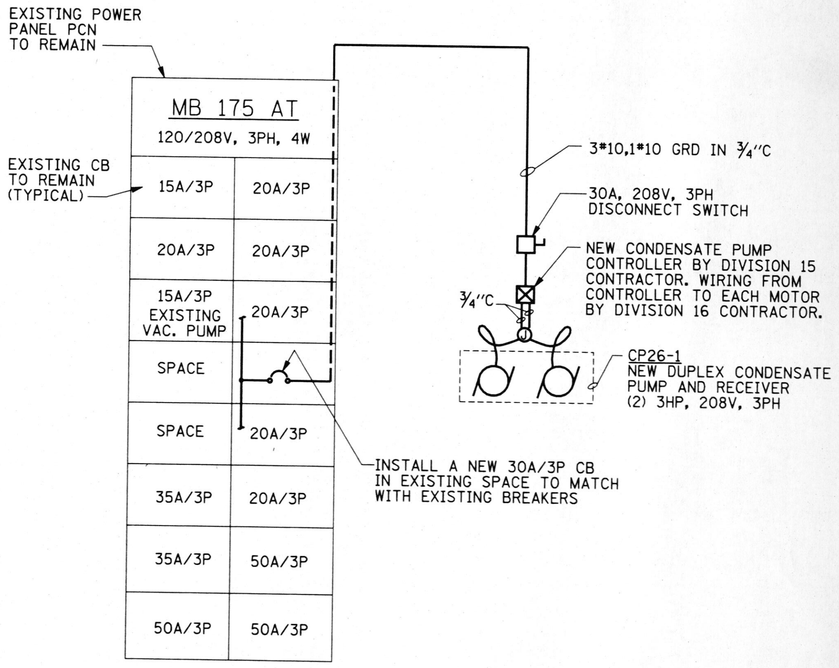

PARTIAL POWER DISTRIBUTION DIAGRAM
MECHANICAL EQUIPMENT ROOM NORTH BUILDING #26
(FORENCE BLDG.) BASEMENT LEVEL
NO SCALE

NOTES:

1. REFER TO DWG. E-1 FOR SYMBOL LIST, AND GENERAL NOTES, RENOVATION NOTES, AND MECHANICAL EQUIPMENT ELECTRICAL CONNECTION SCHEDULE.

REFERENCE DWGS:

M-19 EXISTING PIPING AND DEMOLITION BASEMENT LEVEL NORTH - BUILDING #26

M-21 NEW PIPING AND MECHANICAL EQUIPMENT ROOM PLAN NORTH - BUILDING #26

M-44 EQUIPMENT SCHEDULES

AS BUILT

DATE: FEBRUARY 3, 2003

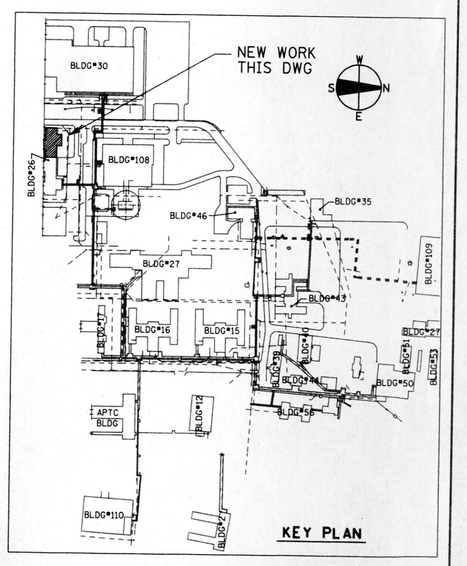

KEY PLAN

REVISIONS			DRAWN	PREPARED	SEAL
NO.	DATE	REMARKS	GGL		
			TRACED	APPROVED	
			CHECKED	APPROVED	

STV Incorporated
engineers/architects/planners/scientists/construction managers
70 W. MADISON ST. SUITE 2840 CHICAGO, IL 60602

CAPITAL DEVELOPMENT BOARD

State of Illinois
George H. Ryan, Governor

TUNNEL AND STEAM PIPING RENOVATIONS
ELECTRICAL AND DEMOLITION PLANS
MECHANICAL EQUIPMENT ROOM NORTH BUILDING #26
BASEMENT LEVEL

ELGIN MENTAL HEALTH CENTER
750 SOUTH STATE STREET
ELGIN, ILLINOIS 60123

CDB PROJECT NO: 321-055-097 PH-2
DATE: FEBRUARY 3, 2003
SHEET NO: E-10
OF SHEETS

I:\PROJECTS\I642\EPHASE1\E10.DGN

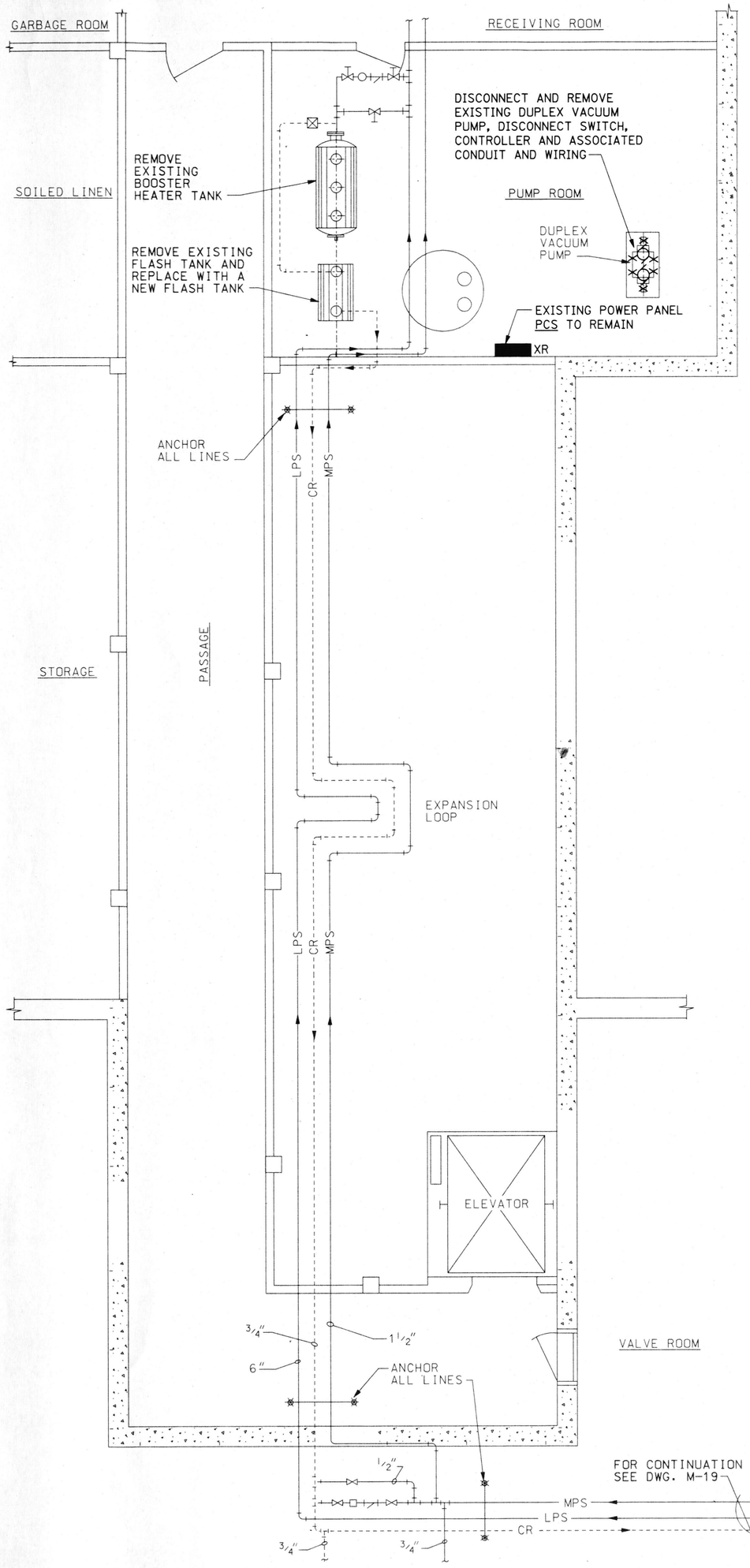

ELECTRICAL DEMOLITION PLAN
MECHANICAL EQUIPMENT ROOM SOUTH BUILDING #26 (FORENSIC BLDG.)
BASEMENT LEVEL
SCALE: 1/4"=1'-0"

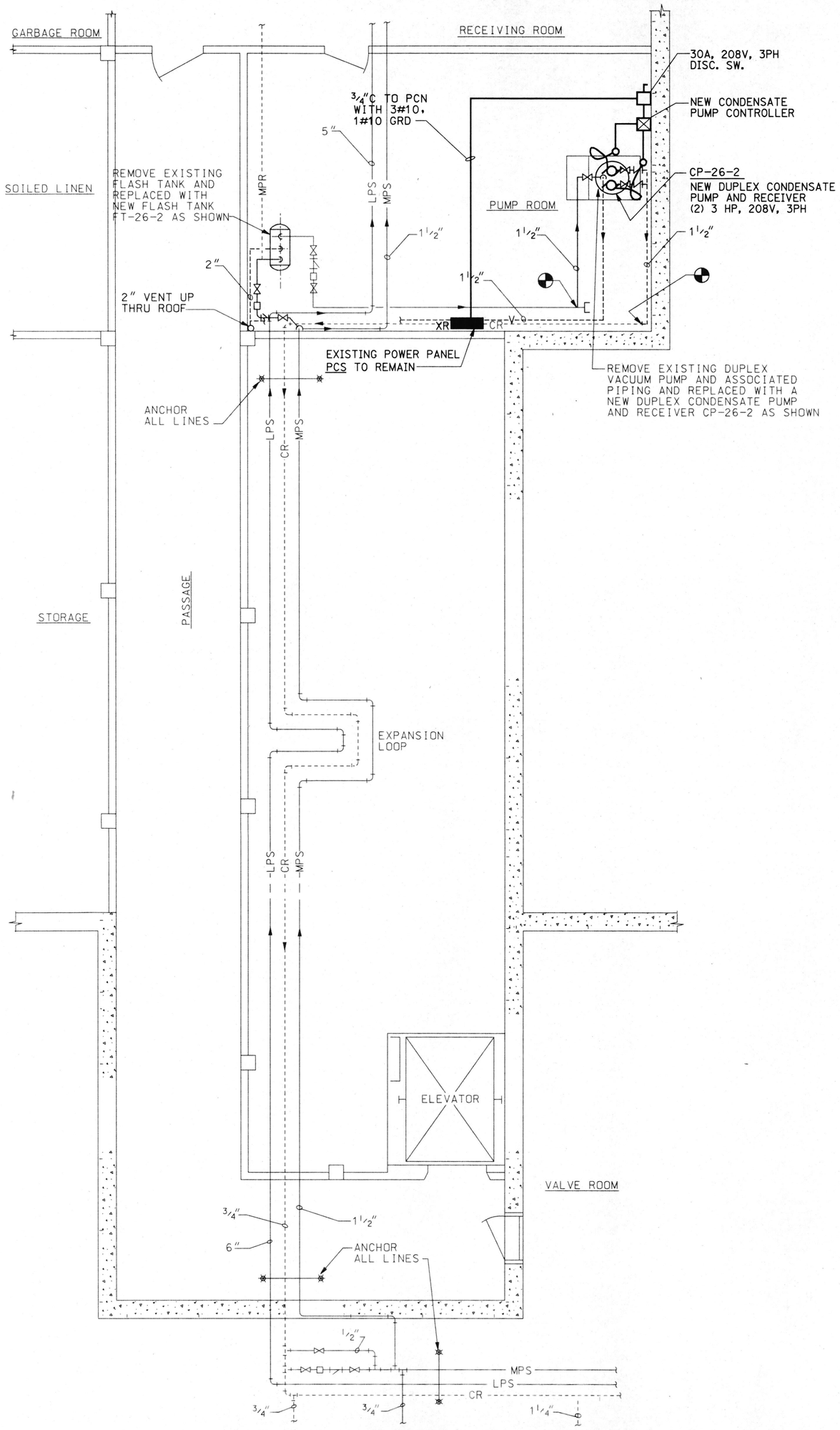

ELECTRICAL PLAN
MECHANICAL EQUIPMENT ROOM SOUTH BUILDING #26 (FORENSIC BLDG.)
BASEMENT LEVEL
SCALE: 1/4"=1'-0"

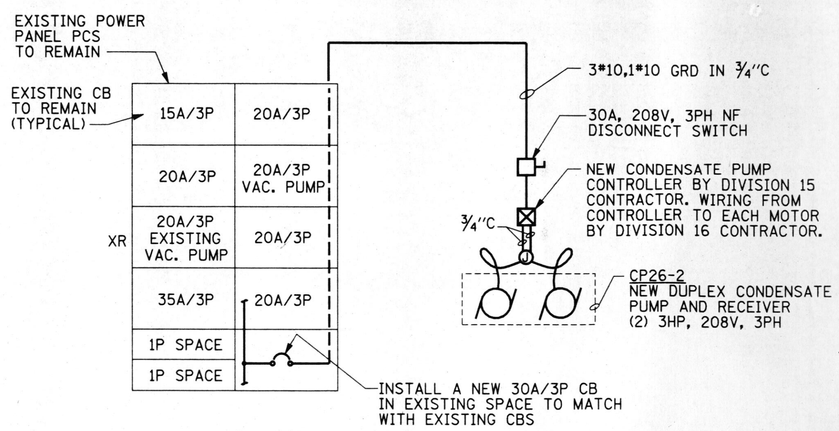

PARTIAL POWER DISTRIBUTION DIAGRAM
MECHANICAL EQUIPMENT ROOM SOUTH BUILDING #26 (FORENSIC BLDG.) BASEMENT LEVEL
NTS

NOTES:

1. REFER TO DWG. E-1 FOR SYMBOL LIST, AND GENERAL NOTES, RENOVATION NOTES, AND MECHANICAL EQUIPMENT ELECTRICAL CONNECTION SCHEDULE.

REFERENCE DWGS:

M-20 EXISTING PIPING AND DEMOLITION BASEMENT LEVEL SOUTH - BUILDING #26

M-22 NEW PIPING AND MECHANICAL EQUIPMENT ROOM PLAN SOUTH - BUILDING #26

M-44 EQUIPMENT SCHEDULES

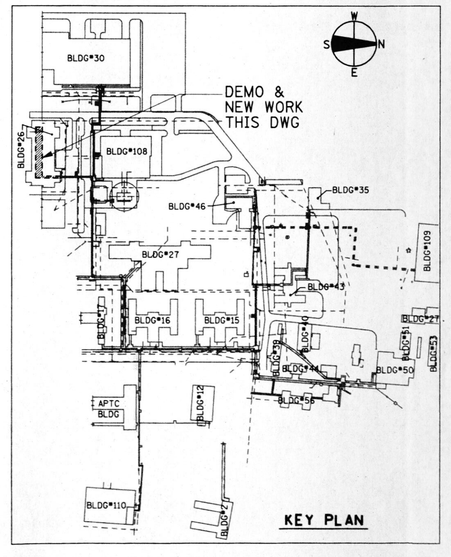

AS BUILT
DATE: FEBRUARY 3. 2003

REVISIONS			DRAWN	PREPARED
NO.	DATE	REMARKS	GGL	
			TRACED	APPROVED
			CHECKED	APPROVED

SEAL: KEVIN J. VAUGHAN, 37265, REGISTERED PROFESSIONAL ENGINEER, ILLINOIS, 11-30-04, DATE

STV Incorporated
engineers/architects/planners/scientists/construction managers
70 W. MADISON ST. SUITE 2840 CHICAGO, IL 60602

CAPITAL DEVELOPMENT BOARD

State of Illinois
George H. Ryan, Governor

TUNNEL AND STEAM PIPING RENOVATIONS
ELECTRICAL AND DEMOLITION PLANS
MECHANICAL EQUIPMENT ROOM NORTH BUILDING #26
BASEMENT LEVEL

ELGIN MENTAL HEALTH CENTER
750 SOUTH STATE STREET
ELGIN, ILLINOIS 60123

CDB PROJECT NO: 321-055-097 PH-2
DATE: FEBRUARY 3, 2003
SHEET NO: E-11
OF SHEETS

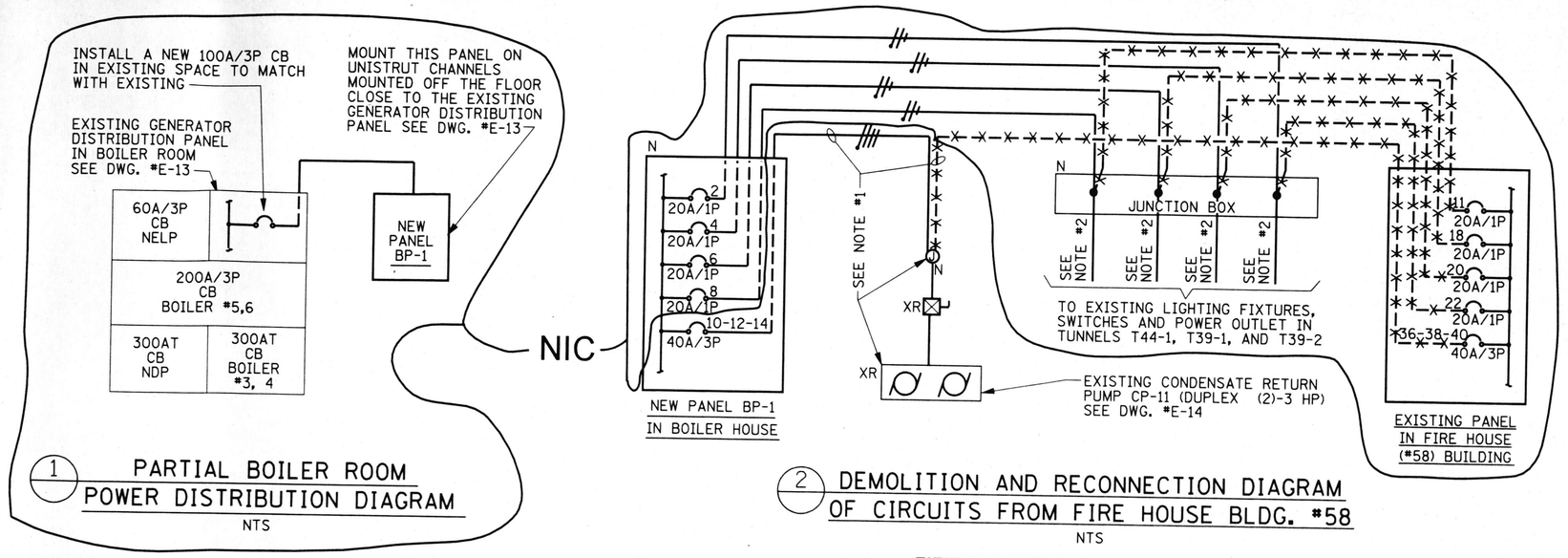

1 PARTIAL BOILER ROOM POWER DISTRIBUTION DIAGRAM
NTS

2 DEMOLITION AND RECONNECTION DIAGRAM OF CIRCUITS FROM FIRE HOUSE BLDG. *58
NTS

LEGEND:
-x-x-x-x- =DISCONNECT AND REMOVE
N =NEW
XR =EXISTING TO REMAIN

	PROJECT	EMH PHASE 3 TUNNEL						PANEL NUMBER	BRP	
	MAINS	100AMPS	X M.O	MB				VOLTAGE	208/120V, 3ϕ,	4W+G
SHEET OF	SURFACE		FLUSH	NO. OF CCTS.				LOCATION	BURR BLDG. *15	
CIRCUIT USE	SIZE	AØ	BØ	CØ	CCT.	AØ	BØ	CØ	SIZE	CIRCUIT USE
SPARE	20A/1P	—	—	—	1	2	—	—	20A/1P	SPARE
SPARE	20A/1P	—	—	—	3	4	—	500	20A/1P	RECEPT FOR SUMP PUMP (SP-6)
DUPLEX Ø FOR SUMP PUMP IN ENLARGEMENT AREA *14 (SP-3)	20A/1P	—	—	500	5	6	—	—	20A/1P	LTG. TUNNEL T16-4
DUPLEX RECEPTACLE FOR SUMP PUMP IN ENLARGEMENT AREA *12 (SP-4)	20A/1P	500	—	—	7	8	—	—	20A/1P	SPARE
DUPLEX Ø FOR SUMP PUMP IN ENLARGEMENT AREA *10 (SP-5)	20A/1P	—	500	—	9	10	—	—	20A/1P	SPARE
SPARE	20A/1P	—	—	—	11	12	—	—	20A/1P	SPARE
SPARE	20A/1P		—	—	13	14	—	—	20A/1P	SPARE
SPARE	20A/1P	—		—	15	16	—	—	20A/1P	SPARE
SPARE	20A/1P	—	—		17	18	—	—	20A/1P	SPARE
SPARE	20A/1P		—	—	19	20	—	—	20A/1P	SPARE
SPARE	20A/1P	—		—	21	22	—	—	20A/1P	SPARE
SPARE	20A/1P	—	—		23	24	—	—	20A/1P	SPARE
		—	—	—	25	26	—	—		
		—	—	—	27	28	—	—		
		—	—	—	29	30	—	—		
		—	—	—	31	32	—	—		
		—	—	—	33	34	—	—		
		—	—	—	35	36	—	—		
		—	—	—	37	38	—	—		
		—	—	—	39	40	—	—		
		—	—	—	41	42	—	—		
SUB TOTALS		500	500	500			500		SUB TOTALS	

PHASE A	500
PHASE B	1000
PHASE C	500
TOTAL CONNECTED LOAD	2000

AMPS.

	PROJECT	EMHC						PANEL NUMBER	BP-1	
	MAINS	100 AMPS	X M.O	MB				VOLTAGE	208/120V	3ϕ, 4W+G
SHEET OF	SURFACE		FLUSH	NO. OF CCTS.				LOCATION	BOILER HOUSE	
CIRCUIT USE	SIZE	AØ	BØ	CØ	CCT.	AØ	BØ	CØ	SIZE	CIRCUIT USE
LTG. & POWER CKT TUNNEL T39-1, T39-2	20A/1P	1000	—	—	1	2	1100	—	20A/1P	TUNNEL T49-1, T39-1, T39-2, LTG7, POWER
LTG. & POWER CKT TUNNEL T39-1, T39-2	20A/1P	—	1100	—	3	4	—	900	20A/1P	TUNNEL T49-1, T39-1, T39-2, LTG7, POWER
LTG. & POWER CKT TUNNEL T39-1, T39-2	20A/1P	—	—	1200	5	6	—	—	20A/1P	TUNNEL T49-1, T39-1, T39-2, LTG7, POWER
EXHAUST FAN EF-1	20A/1P	800	—	—	7	8	1200	—	20A/1P	TUNNEL T49-1, T39-1, T39-2, LTG7, POWER
LTG. & POWER CKT TUNNEL T39-1, T39-2	20A/1P	—	900	—	9	10	—	2544	40A/3P	CP-11, CONDENSATE RETURN PUMP 2-3 HP
SUMP PUMP IN TUNNEL T39-2 ENLARGEMENT PLAN #7 (SP-7)	20A/1P	—	—	800	11	12	—	2544		
SPARE	20A/1P	—	—	—	13	14	2544	—		
SPARE	20A/1P	—	—	—	15	16	—	—	20A/1P	SPARE
SPARE	20A/1P	—	—	—	17	18	—	—	20A/1P	SPARE
SPARE	20A/1P	—	—	—	19	20	—	—	20A/1P	SPARE
SPARE	20A/1P	—	—	—	21	22	—	—	20A/1P	SPARE
SPARE	20A/1P	—	—	—	23	24	—	—	20A/1P	SPARE
		—	—	—	25	26	—	—		
		—	—	—	27	28	—	—		
		—	—	—	29	30	—	—		
		—	—	—	31	32	—	—		
		—	—	—	33	34	—	—		
		—	—	—	35	36	—	—		
		—	—	—	37	38	—	—		
		—	—	—	39	40	—	—		
		—	—	—	41	42	—	—		
SUB TOTALS		1800	2000	2000			4844	3444	3544	SUB TOTALS

PHASE A	6644
PHASE B	5444
PHASE C	5544
TOTAL CONNECTED LOAD	17632

AMPS. 49

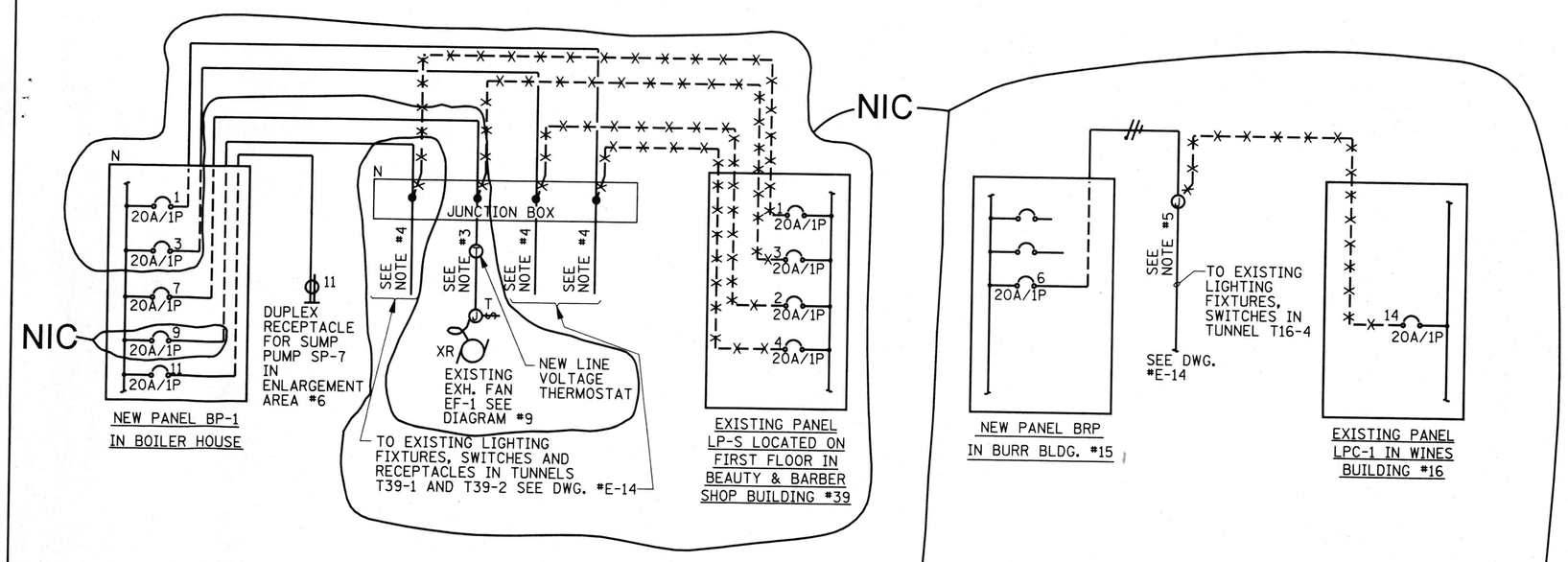

3 DEMOLITION AND RECONNECTION DIAGRAM OF CIRCUITS FROM BEAUTY AND BARBER SHOP (BLDG. *39)
NTS

4 DEMOLITION AND RECONNECTION DIAGRAM OF CIRCUITS FROM WINES BLDG. *16
NTS

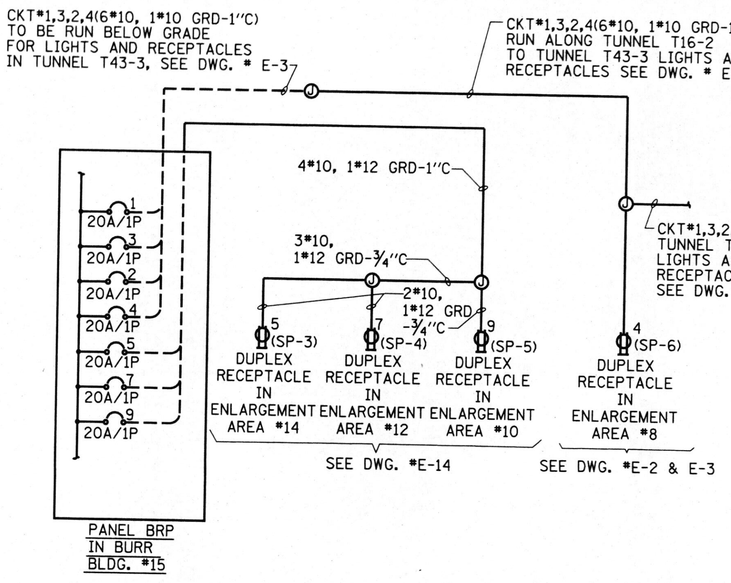

5 ENLARGEMENT AREA * 14, 12, 10, 8 SUMP PUMP WIRING DIAGRAM
NTS

NOTES:

1. DISCONNECT EXISTING CONDENSATE RETURN PUMP (CP-11) FROM FIRE HOUSE (*58) PANEL (CKT *36-38-40) AND RECONNECT TO NEW PANEL BP-1 (CKT *10-12-14) LOCATED IN THE BOILER HOUSE BY INTERCEPTING THE EXISTING CONDUIT IN A JUNCTION BOX AND EXTENDING THE CONDUIT TO THE NEW PANEL BP-1 IN THE BOILER HOUSE. ALL EXISTING CONTROLS SHALL REMAIN. CONDUCTORS SHALL BE THE SAME SIZE AS EXISTING (3*8, 1*8 GRD).

NIC

2. DISCONNECT EXISTING LIGHTING AND POWER CIRCUITS *11, 18, 20, 22 FROM FIRE HOUSE (*58) PANEL AND RECONNECT TO NEW CIRCUITS *2, 4, 6, 8 FROM NEW PANEL BP-1 LOCATED IN BOILER HOUSE BY INTERCEPTING THE EXISTING CONDUIT IN A JUNCTION BOX AND EXTENDING CONDUIT TO THE NEW PANEL BP-1 IN THE BOILER HOUSE. ALL EXISTING LIGHTING CONTROL BY SWITCHING SHALL REMAIN AS BEFORE. CONDUCTORS SHALL BE THE SAME AS EXISTING. (*10 FOR PHASE AND NEUTRAL AND *12 FOR GRD)

3. DISCONNECT EXISTING EXHAUST FAN EF-1 FROM PANEL LP-S (CKT *3) LOCATED IN BEAUTY AND BARBER SHOP BLDG. *39 AND RECONNECT TO NEW PANEL BP-1 (CKT *7) LOCATED IN THE BOILER HOUSE BY INTERCEPTING THE EXISTING CONDUIT IN A NEW JUNCTION BOX AND EXTENDING THE CONDUIT TO THE NEW PANEL BP-1 IN THE BOILER HOUSE. ALL EXISTING 3 WAY SWITCH CONTROL FOR EF-1 SHALL BE DISCONNECTED AND REMOVED. EF-1 SHALL BE WIRED THROUGH NEW THERMOSTAT. SEE DIAGRAM *9. CONDUCTORS SHALL BE THE SAME SIZE AS EXISTING.

NIC

4. DISCONNECT EXISTING LIGHTING AND POWER CIRCUITS *1, 2, 4 FROM EXISTING PANEL LP-S LOCATED IN BEAUTY AND BARBER SHOP BLDG. *39 AND RECONNECT TO NEW CIRCUITS *1, 3, AND 9 FROM NEW PANEL BP-1 LOCATED IN BOILER HOUSE BY INTERCEPTING THE EXISTING CONDUIT IN A NEW JUNCTION BOX AND EXTENDING CONDUIT TO THE NEW PANEL BP-1 IN THE BOILER HOUSE. ALL EXISTING LIGHTING CONTROL BY SWITCHING SHALL REMAIN AS BEFORE. CONDUCTORS SHALL BE THE SAME SIZE AS EXISTING. (*10 FOR PHASE AND NEUTRAL CONDUCTORS AND *12 FOR GROUND CONDUCTORS.

5. DISCONNECT EXISTING LIGHTING CIRCUIT *14 FROM EXISTING PANEL LPC1 LOCATED IN WINES BLDG. *16 AND RECONNECT TO NEW CIRCUIT *6 FROM NEW PANEL BRP LOCATED IN BURR BLDG. *15 BY INTERCEPTING THE EXISTING CONDUIT IN A NEW JUNCTION BOX AND EXTENDING CONDUIT TO THE NEW PANEL BRP IN THE BURR BLDG *15. ALL EXISTING LIGHTING CONTROL BY SWITCHING SHALL REMAIN AS BEFORE. CONDUCTORS SHALL BE THE SAME SIZE AS EXISTING (*10 FOR PHASE AND NEUTRAL CONDUCTORS AND *12 FOR GROUND CONDUCTORS).

6. REFER TO DWG. E-1 FOR SYMBOL LIST, AND GENERAL NOTES, RENOVATION NOTES, AND MECHANICAL EQUIPMENT ELECTRICAL CONNECTION SCHEDULE.

REFERENCE DWGS.:

M-8 PARTIAL SITE PLAN - SOUTH SECTION

M-23 EXISTING PIPING AND DEMOLITION - BUILDING #46

M-24 NEW PIPING AND MECHANICAL EQUIPMENT ROOM PLAN - BUILDING #46

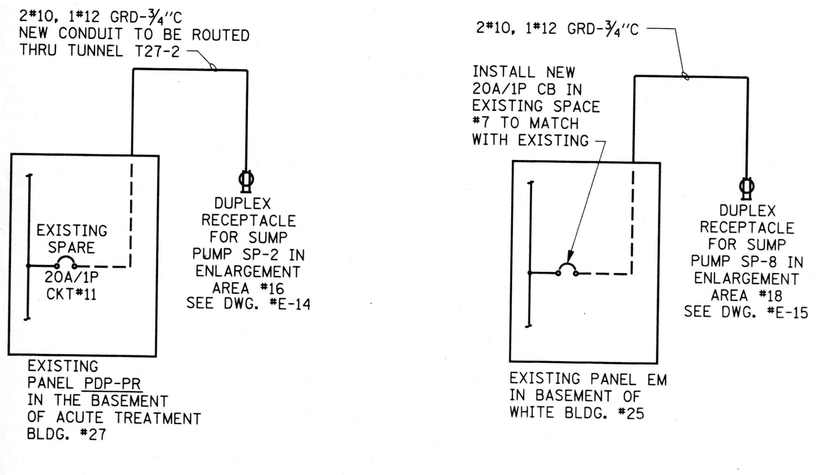

6 ENLARGEMENT AREA *16 SUMP PUMP WIRING DIAGRAM
NTS

7 ENLARGEMENT AREA *18 SUMP PUMP WIRING DIAGRAM
NTS

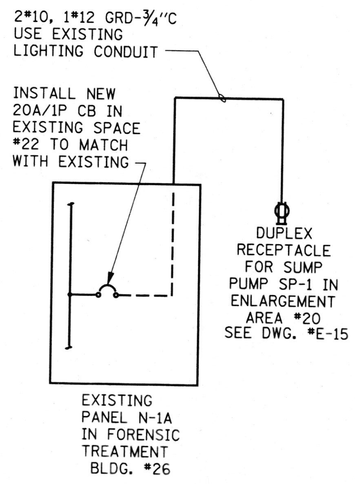

8 ENLARGEMENT AREA *20 SUMP PUMP WIRING DIAGRAM
NTS

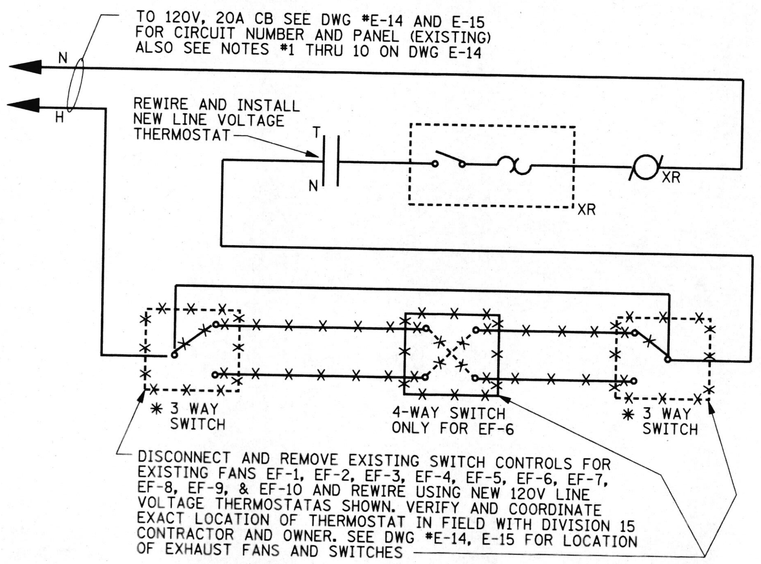

9 CONTROL WIRING MODIFICATION FOR EXISTING EXHAUST FANS EF-1 THRU EF-10
NTS

* EXHAUST FANS EF-7 AND EF-9 HAS ONLY ONE SINGLE POLE CONTROL SWITCH

AS BUILT
DATE: FEBRUARY 3, 2003

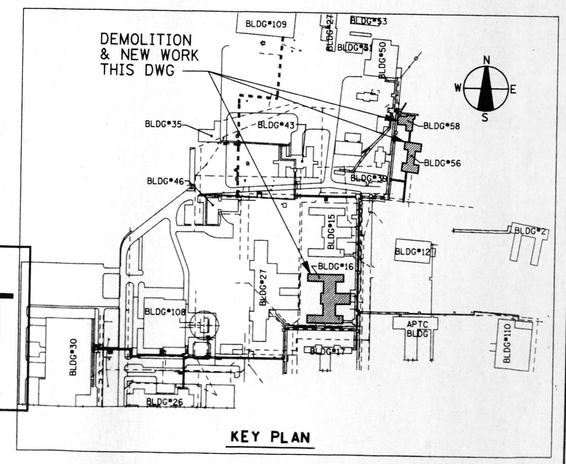

REVISIONS			DRAWN	PREPARED
NO.	DATE	REMARKS	GGL	
			TRACED	APPROVED
			CHECKED	APPROVED

SEAL

STV Incorporated
engineers/architects/planners/scientists/construction managers
70 W. MADISON ST. SUITE 2840 CHICAGO, IL 60602

CAPITAL DEVELOPMENT BOARD

State of Illinois
George H. Ryan, Governor

TUNNEL AND STEAM PIPING RENOVATIONS
ELECTRICAL & DEMOLITION PLANS, WIRING DIAGRAMS OF MISCELLANEOUS BUILDINGS

ELGIN MENTAL HEALTH CENTER
750 SOUTH STATE STREET
ELGIN, ILLINOIS 60123

CDB PROJECT NO: 321-055-097 PH-2
DATE: FEBRUARY 3, 2003
SHEET NO: E-12
OF SHEETS

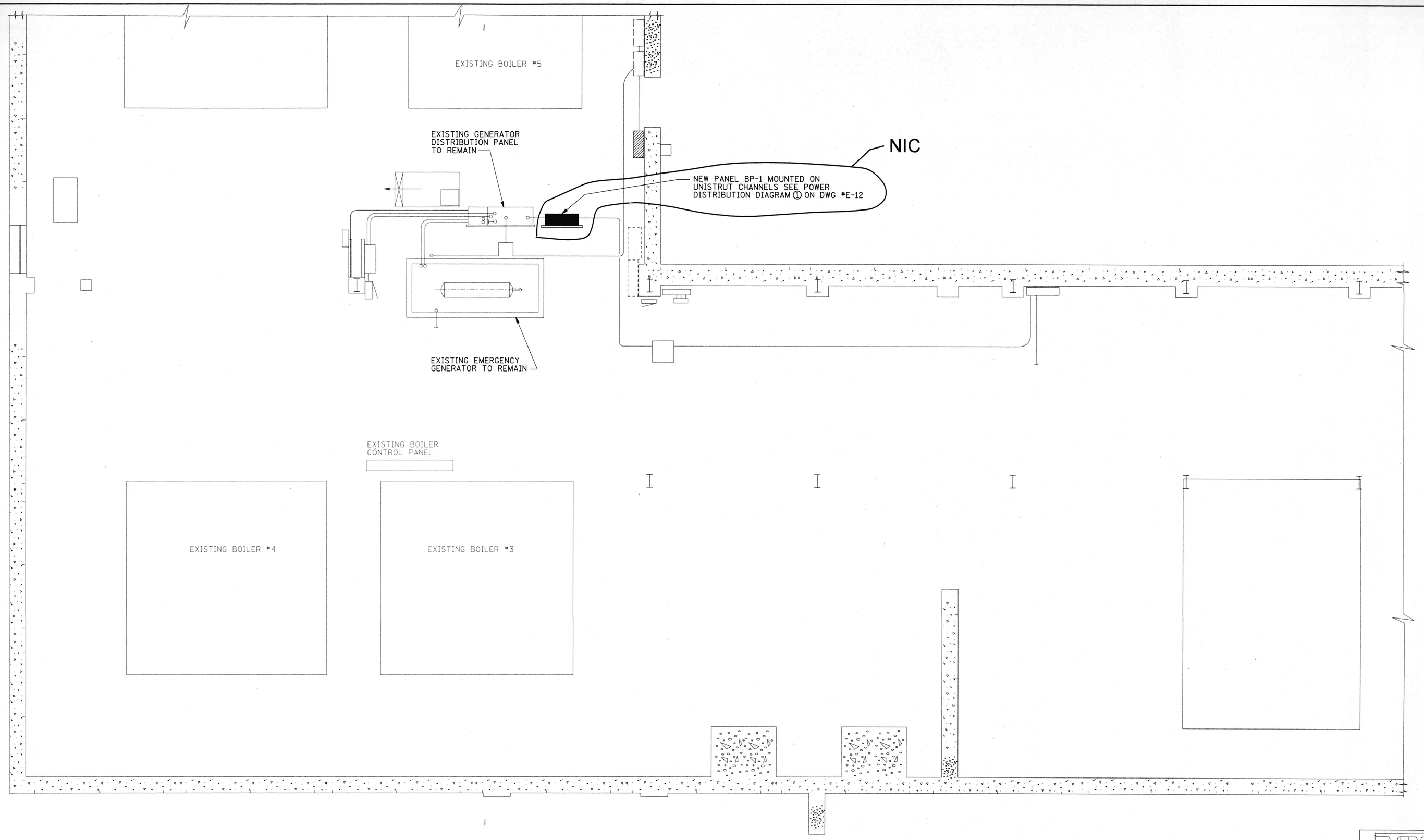

EXISTING BOILER HOUSE (BLDG #50) - PARTIAL OPERATING FLOOR PLAN

SCALE: 1/4"=1'-0"

NOTES:

1. REFER TO DWG. E-1 FOR SYMBOL LIST, AND GENERAL NOTES, RENOVATION NOTES, AND MECHANICAL EQUIPMENT ELECTRICAL CONNECTION SCHEDULE.

AS BUILT

DATE: FEBRUARY 3, 2003

REFERENCE DWGS:

E-5 ELECTRICAL - BOILER HOUSE OPERATING FLOOR PLAN DATED MARCH 11,1996 CDB PROJECT #321-055-097

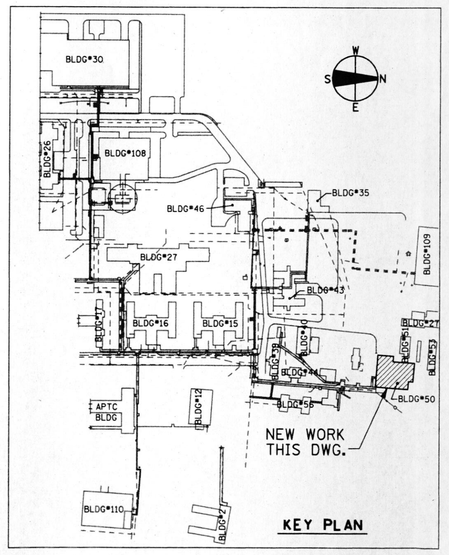

KEY PLAN

REVISIONS			DRAWN	PREPARED	SEAL
NO.	DATE	REMARKS	GGL		
			TRACED	APPROVED	
			CHECKED	APPROVED	

STV Incorporated
engineers/architects/planners/scientists/construction managers
70 W. MADISON ST. SUITE 2840 CHICAGO, IL 60602

CAPITAL DEVELOPMENT BOARD

State of Illinois
George H. Ryan, Governor

TUNNEL AND STEAM PIPING RENOVATIONS
ELECTRICAL - PARTIAL BOILER HOUSE
OPERATING FLOOR PLAN (BLDG #50)

ELGIN MENTAL HEALTH CENTER
750 SOUTH STATE STREET
ELGIN, ILLINOIS 60123

CDB PROJECT NO: 321-055-097 PH-2
DATE FEBRUARY 3, 2003
SHEET NO: E-13
OF SHEETS

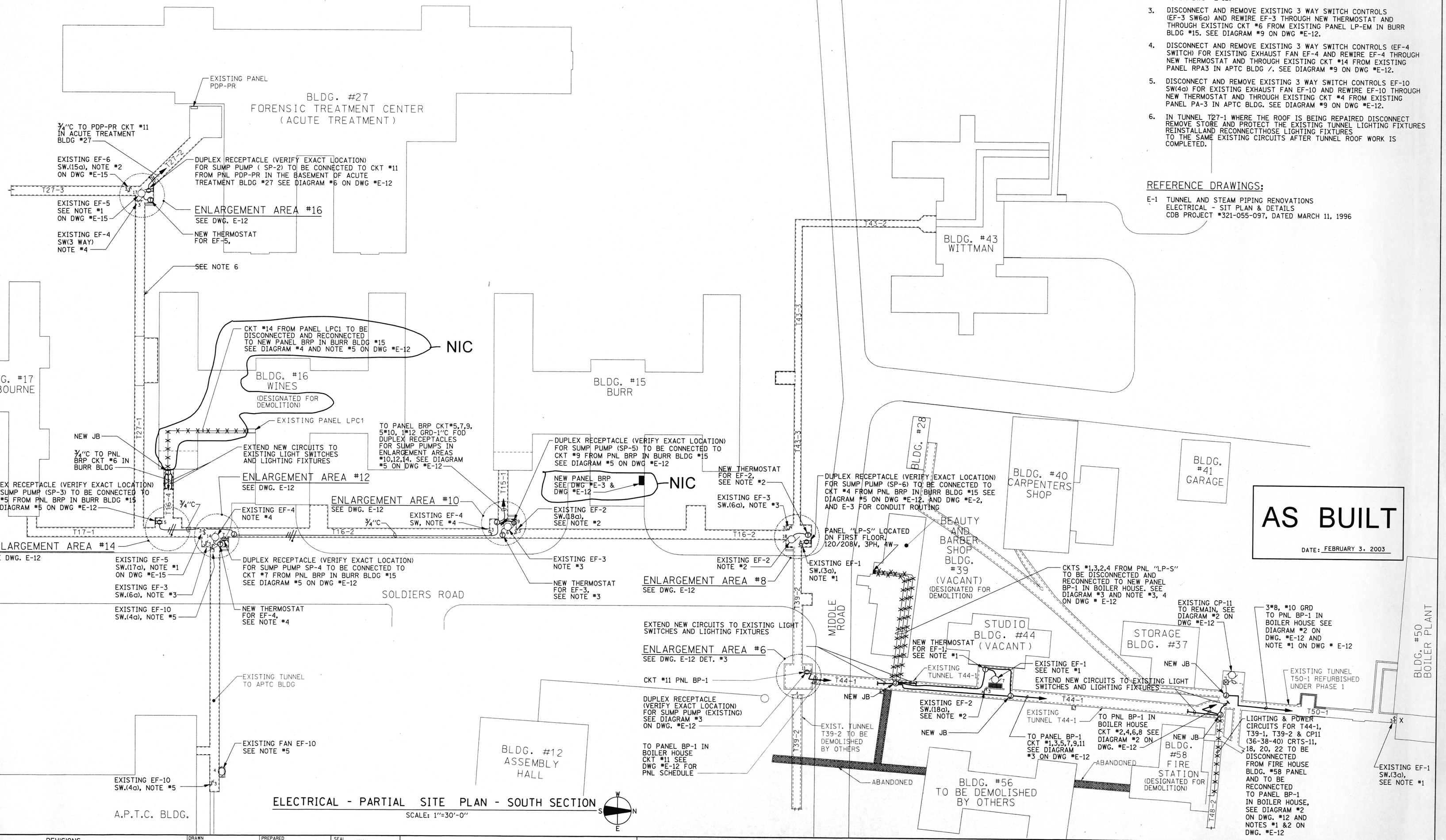

NOTES:

1. DISCONNECT AND REMOVE EXISTING 3 WAY SWITCH CONTROLS EF-1 SW(3a) AND REWIRE EF-1 THROUGH NEW THERMOSTAT. AND THROUGH NEW CKT #7 FROM PANEL BP-1 IN BOILER HOUSE. SEE DIAGRAMS #3 AND #9 ON DWG #E-12.
2. DISCONNECT AND REMOVE EXISTING 3 WAY SWITCH CONTROLS EF-2 SW(18a) AND REWIRE EF-2 THROUGH NEW THERMOSTAT AND EXISTING CKT #18 FROM PANEL LP-2 IN BURR BLDG. SEE DIAGRAM #9 ON DWG #E-12.
3. DISCONNECT AND REMOVE EXISTING 3 WAY SWITCH CONTROLS (EF-3 SW6a) AND REWIRE EF-3 THROUGH NEW THERMOSTAT AND THROUGH EXISTING CKT #6 FROM EXISTING PANEL LP-EM IN BURR BLDG #15. SEE DIAGRAM #9 ON DWG #E-12.
4. DISCONNECT AND REMOVE EXISTING 3 WAY SWITCH CONTROLS (EF-4 SWITCH) FOR EXISTING EXHAUST FAN EF-4 AND REWIRE EF-4 THROUGH NEW THERMOSTAT AND THROUGH EXISTING CKT #14 FROM EXISTING PANEL RPA3 IN APTC BLDG /. SEE DIAGRAM #9 ON DWG #E-12.
5. DISCONNECT AND REMOVE EXISTING 3 WAY SWITCH CONTROLS EF-10 SW(4a) FOR EXISTING EXHAUST FAN EF-10 AND REWIRE EF-10 THROUGH NEW THERMOSTAT AND THROUGH EXISTING CKT #4 FROM EXISTING PANEL PA-3 IN APTC BLDG. SEE DIAGRAM #9 ON DWG #E-12.
6. IN TUNNEL T27-1 WHERE THE ROOF IS BEING REPAIRED DISCONNECT REMOVE STORE AND PROTECT THE EXISTING TUNNEL LIGHTING FIXTURES REINSTALLAND RECONNECTTHOSE LIGHTING FIXTURES TO THE SAME EXISTING CIRCUITS AFTER TUNNEL ROOF WORK IS COMPLETED.

REFERENCE DRAWINGS:

E-1 TUNNEL AND STEAM PIPING RENOVATIONS
ELECTRICAL - SIT PLAN & DETAILS
CDB PROJECT #321-055-097, DATED MARCH 11, 1996

AS BUILT
DATE: FEBRUARY 3. 2003

ELECTRICAL - PARTIAL SITE PLAN - SOUTH SECTION

SCALE: 1"=30'-0"

REVISIONS			DRAWN	PREPARED
NO.	DATE	REMARKS	GGL	
			TRACED	APPROVED
			CHECKED	APPROVED

SEAL: KOSTYA J. VINOGRAD, 87295, PROFESSIONAL ENGINEER, ILLINOIS

STV Incorporated
engineers/architects/planners/scientists/construction managers
70 W. MADISON ST. SUITE 2840 CHICAGO, IL 60602

CAPITAL DEVELOPMENT BOARD

State of Illinois
George H. Ryan, Governor

TUNNEL AND STEAM PIPING RENOVATIONS
ELECTRICAL
PARTIAL SITE PLAN - SOUTH SECTION

ELGIN MENTAL HEALTH CENTER
750 SOUTH STATE STREET
ELGIN, ILLINOIS 60123

CDB PROJECT NO: 321-055-097 PH-2
DATE: FEBRUARY 3. 2003
SHEET NO: E-14
OF SHEETS

T:\PROJECTS\1842-1\phase1\E14.DGN 02/04/2003 11:10:33 AM

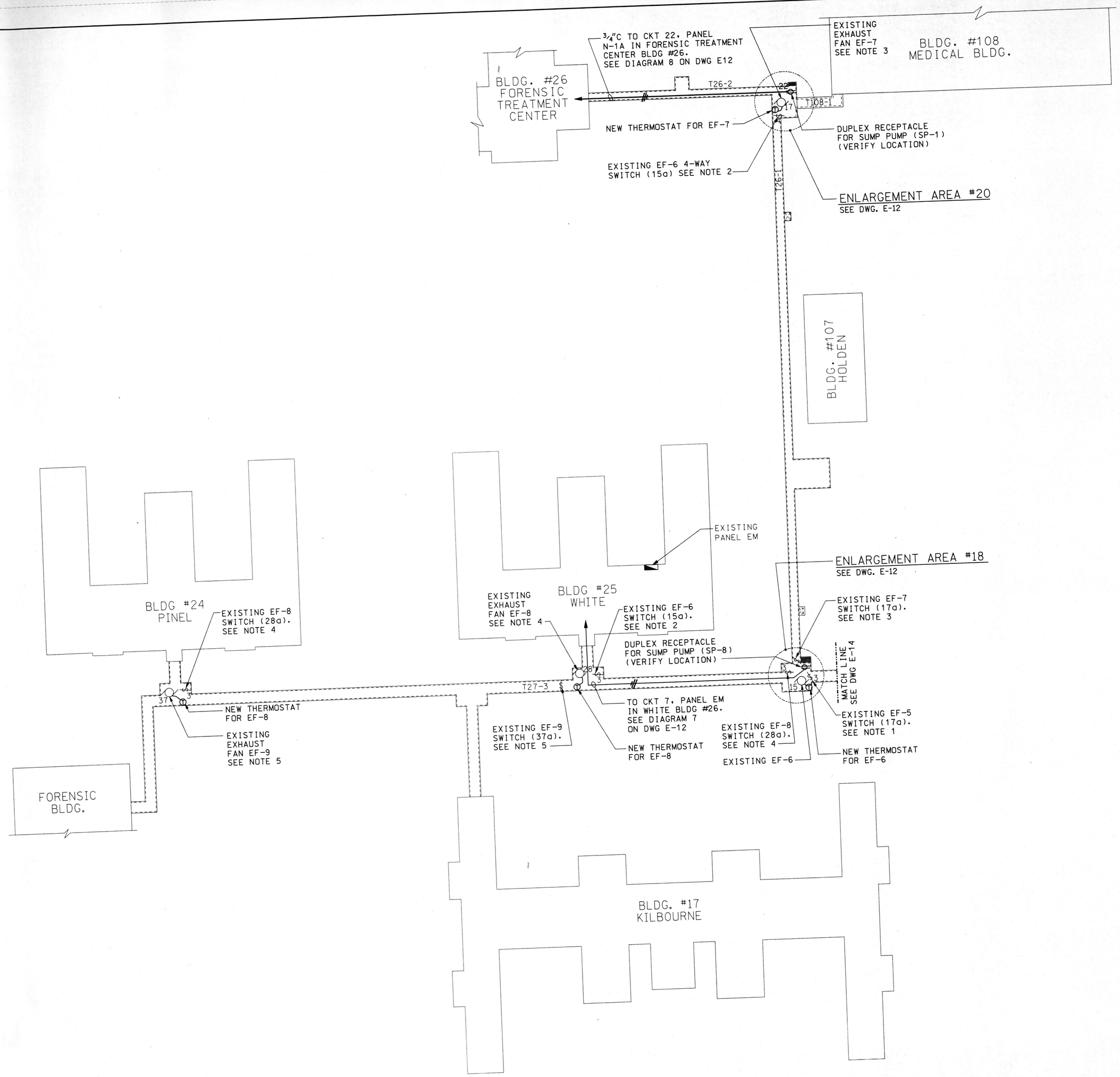

PARTIAL SITE PLAN
SCALE: 1"=30'-0"

NOTES:

1. DISCONNECT AND REMOVE EXISTING 3 WAY SWITCH CONTROLS EF-5 SW(17a) FOR EXISTING EXHAUST FAN EF-5 AND REWIRE EF-5 THROUGH NEW THERMOSTAT AND THROUGH EXISTING CKT #17 FROM EXISTING PANEL PDP-PR IN ACUTE TREATMENT CENTER BLDG #27. SEE DIAGRAM #9 ON DWG #E-12. SEE DWG # E-14 FOR LOCATION OF EF-5.

2. DISCONNECT AND REMOVE EXISTING 3 WAY AND 4 WAY SWITCH CONTROLS EF-6 SW15a FOR EXISTING EXHAUST FAN EF-6 AND REWIRE EF-6 THROUGH NEW THERMOSTAT AND THROUGH EXISTING CKT #15 FROM EXISTING PANEL ATC R DPR PANEL IN APTC BLDG. SEE DIAGRAM #9 ON DWG # E-12.

3. DISCONNECT AND REMOVE EXISTING SWITCH CONTROL EF-7 SW(17a) FOR EXISTING EXHAUST FAN EF-7 AND REWIRE EF-7 THROUGH NEW THERMOSTAT AND THROUGH EXISTING CKT #17 FROM EXISTING PANEL N-1A IN FORENSIC TREATMENT CENTER BLDG. #26. SEE DIAGRAM #9 ON DWG # E-12.

4. DISCONNECT AND REMOVE EXISTING 3 WAY SWITCH CONTROLS EF-8 SW(28a) FOR EXISTING EXHAUST FAN EF-8 AND REWIRE EF-8 THROUGH NEW THERMOSTAT AND THROUGH EXISTING CKT #28 FROM EXISTING PANEL EM IN WHITE BLDG #25. SEE DIAGRAM #9 ON DWG # E-12.

5. DISCONNECT AND REMOVE EXISTING SWITCH CONTROLS EF-9 SW(37a) FOR EXISTING EXHAUST FAN EF-9 AND REWIRE EF-9 THROUGH NEW THERMOSTAT AND THROUGH EXISTING CIRCUIT #37 FROM EXISTING PANEL LP-1 IN DINEL BLDG #24. SEE DIAGRAM #9 ON DWG # E-12.

REFERENCE DRAWINGS:

E-2 TUNNEL AND STEAM PIPING RENOVATIONS
ELECTRICAL - SIT PLAN & DETAILS
CDB PROJECT #321-055-097, DATED MARCH 11, 1996

AS BUILT
DATE: FEBRUARY 3. 2003

REVISIONS			DRAWN	PREPARED
NO.	DATE	REMARKS	GGL	
			TRACED	APPROVED
			CHECKED	APPROVED

SEAL: KOSTY J. VASILION, 36709, REGISTERED PROFESSIONAL ENGINEER, ILLINOIS, 11-30-02

h:\PROJECTS\1642\EPHASE1\E15.DGN

STV Incorporated
engineers/architects/planners/scientists/construction managers
70 W. MADISON ST. SUITE 2840 CHICAGO, IL 60602

CAPITAL DEVELOPMENT BOARD

State of Illinois
George H. Ryan, Governor

TUNNEL AND STEAM PIPING RENOVATIONS
ELECTRICAL
PARTIAL SITE PLAN - SOUTH SECTION

ELGIN MENTAL HEALTH CENTER
750 SOUTH STATE STREET
ELGIN, ILLINOIS 60123

CDB PROJECT NO: 321-055-097 PH-2
DATE: FEBRUARY 3. 2003
SHEET NO: E-15
OF SHEETS

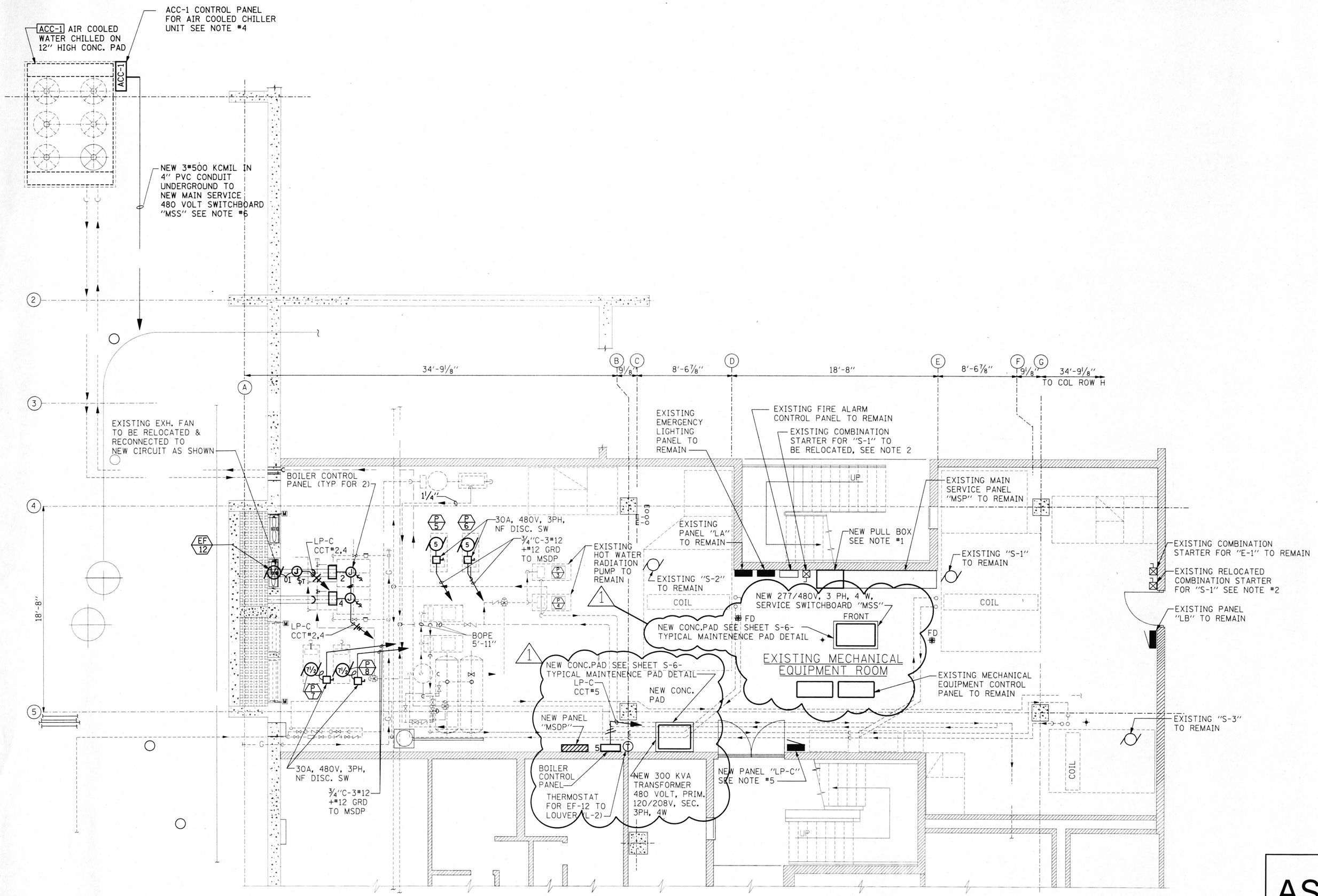

LOWER LEVEL POWER PLAN - BUILDING #67 EQUIPMENT ROOM

SCALE: 1/4"=1'-0"

REFERENCES:

M-37.....NEW BOILERS & PIPINGS, BLDG. #67 EQUIPMENT ROOM PLAN

M-44.....EQUIPMENT SCHEDULES

NOTES:

1. FURNISH AND INSTALL NEW PULL BOX ADJACENT TO EXISTING SERVICE PANEL "MSP", THE NEW PULL BOX SHALL BE 24" WIDE AND OF THE SAME HEIGHT AND DEPTH AS EXISTING SERVICE PANEL "MSP".
2. ELECTRICAL CONTRACTOR TO RELOCATE EXISTING COMBINATION STARTER FOR "S-1" FAN AND WIRE TO EXISTING "S-1" MOTOR AS REQUIRED.
3. FOR ADDITIONAL INFORMATION AND EQUIPMENT WIRING REFER TO SINGLE LINE DIAGRAM ON DWG. E.
4. CHILLER CONTROL PANEL "ACC-1" IS FURNISHED WITH EQUIPMENT CONSISTING WITH ALL STARTING AND CONTROL COMPONENTS, INCLUDING MOTOR PROTECTION DEVICES AND MAIN DISCONNECT SWITCH. ELECTRICAL CONTRACTOR TO INSTALL CONTROL TRANSFORMER, FURNISHED WITH EQUIPMENT, AND WIRE AS RECOMMENDED BY MANUFACTURER.
5. NEW PANEL "LP-C" SHALL BE SURFACE MOUNTED 120/208 VOLT, 3 PHASE, 4 WIRE AND GROUND BUS, MAIN LUGS ONLY WITH 24-20 AMP. SINGLE POLE BRANCH CIRCUIT BREAKERS AND SIX (6) SINGLE POLE SPACES.
6. ELECTRICAL CONTRACTOR TO COORDINATE IN FIELD INSTALLATION OF UNDERGROUND FEEDER, SERVING CHILLER UNIT "ACC-1", USING ALL NECESSARY EQUIPMENT AND MATERIAL, INCLUDING HAND HOLES, PULL BOXES AND OTHER COMPONENTS AS REQUIRED.
7. ALL ELECTRICAL EQUIPMENT IS NEW, UNLESS NOTED OTHERWISE.
8. REFER TO THE DWG. E-1 FOR SYMBOL LIST, NOTES AND EQUIPMENT ELECTRICAL CONNECTION SCHEDULE.
9. DISCONNECT, RELOCATE AND RECONNECT EXISTING LIGHTING FIXTURES, IN MECHANICAL ROOM, TO ACCOMODATE INSTALLATION OF NEW MECHANICAL AND ELECTRICAL EQUIPMENT. COORDINATE ALL WORK WITH OTHER TRADES AND FIELD CONDITIONS.

AS BUILT

DATE: FEBRUARY 3. 2003

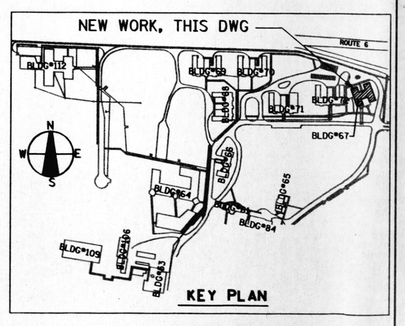

REVISIONS			DRAWN	PREPARED
NO.	DATE	REMARKS	GGL	TMK
1	3-13-01	ADDENDUM #1	TRACED	APPROVED
			CHECKED	APPROVED

SEAL: ROBERT J. VAUGHAN 2000 REGISTERED ILLINOIS ARCHITECT

I:#PROJECTS#1642#EPHASE2#E16.DGN

STV Incorporated
engineers/architects/planners/scientists/construction managers
70 W. MADISON ST. SUITE 2840 CHICAGO, IL 60602

CAPITAL DEVELOPMENT BOARD

State of Illinois
George H. Ryan, Governor

TUNNEL AND STEAM PIPING RENOVATIONS
LOWER LEVEL POWER PLAN
BUILDING #67 EQUIPMENT ROOM

ELGIN MENTAL HEALTH CENTER
750 SOUTH STATE STREET
ELGIN, ILLINOIS 60123

CDB PROJECT NO: 321-055-097 PH-2
DATE: FEBRUARY 3. 2003
SHEET NO: E-16
OF SHEETS

\PROJECTS\1642\Ephase2\E16.dgn 02/04/2003 01:59:10 PM

NOTES:

1. IN REMOVING EXISTING 300 KVA TRANSFORMER AND 2.4 KV LOOP SWITCH, ELECTRICAL CONTRACTOR TO REMOVE EXISTING 5 KV CABLE AND 500 KCMIL WIRES FROM EXISTING CONDUITS. ALSO, WITHIN THE WELL AREA, REMOVE ALL EXISTING CONDUITS SERVING EXISTING 300 KVA TRANSFORMER, EXISTING 2.4 KV LOOP SWITCH AND CONDUITS FOR 120/208 VOLT SERVICE TO THE BUILDING. IN CUTTING THE EXISTING CONDUITS, CAP AND ABANDON ALL REMAINING CONDUITS.
2. THE ROUTING OF CONDUITS IS SHOWN DIAGRAMATICALLY. ELECTRICAL CONTRACTOR TO COORDINATE IN FIELD ACTUAL ROUTING OF CONDUITS, RESOLVING ALL OBSTACLES OF EXISTING CONDITIONS AND USING ALL NECESSARY MATERIAL AND EQUIPMENT AS REQUIRED.
3. ELECTRICAL CONTRACTOR TO INSTALL CONCRETE PAD FOR ComEd TRANSFORMER PER ComEd STANDARDS AND REQUIREMENTS.
4. ComEd COMPANY WILL PROVIDE DIRECT BURIED 12 KV PRIMARY SERVICE FROM 12 KV LINE ComEd POLE TO ComEd PAD MOUNTED TRANSFORMER AT NO COST TO THE OWNER, BASED ON MAXIMUM LENGTH OF 400 FEET AND TRENCH BETWEEN 30 AND 36 INCHES DEEP. EXCEEDING THIS LIMITATIONS, OWNER SHOULD NEGOTIATE WITH ComEd COMPANY FOR ADDITIONAL COST INVOLVED.
5. ALL ELECTRICAL EQUIPMENT IS NEW UNLESS NOTED OTHERWISE.
6. DISCONNECT AND REMOVE WIRING FOR MECHANICAL EQUIPMENT DESIGNATED FOR REMOVAL.

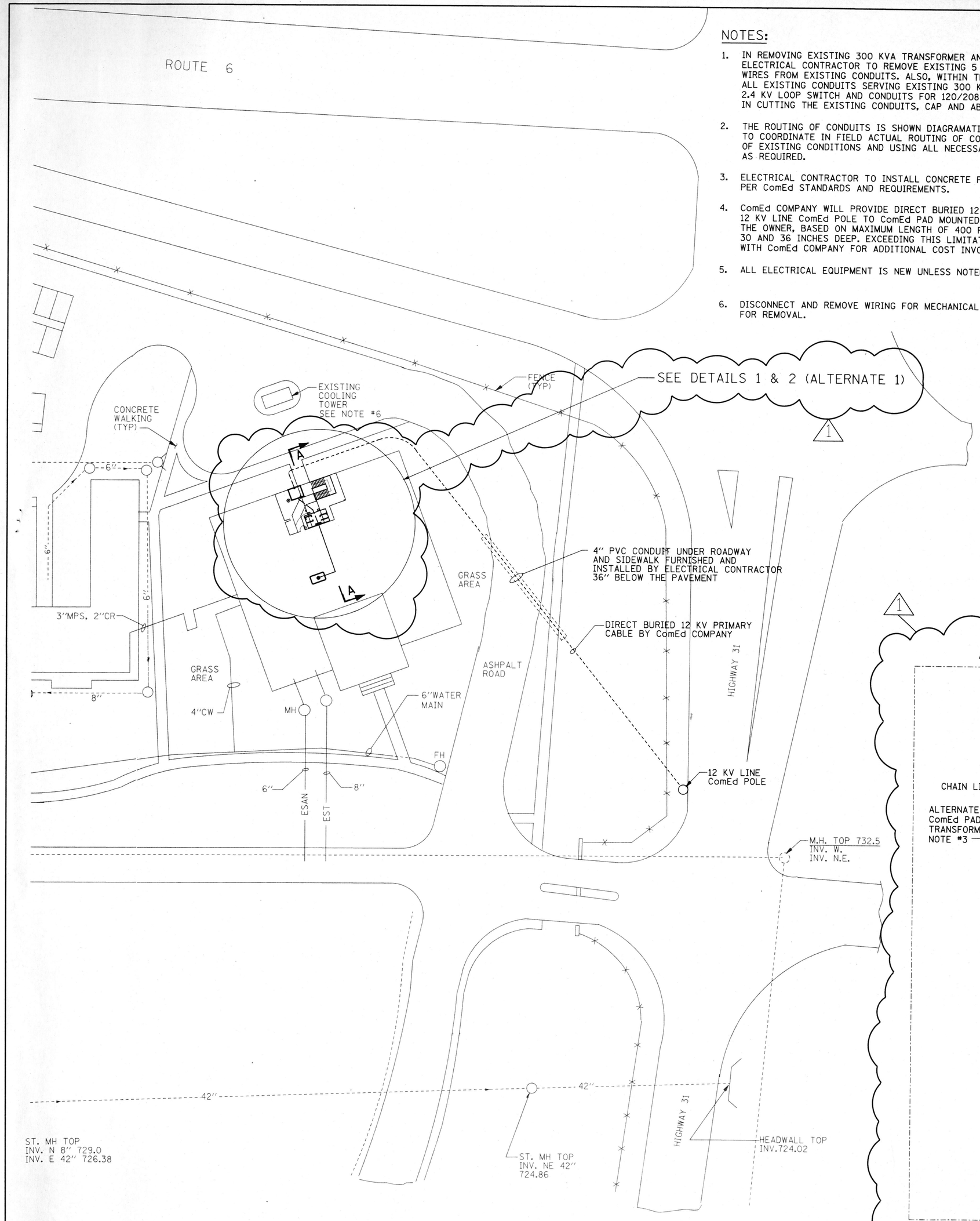

PARTIAL SITE PLAN - NORTH SECTION - BUILDING #67

SCALE: 1"=30'-0"

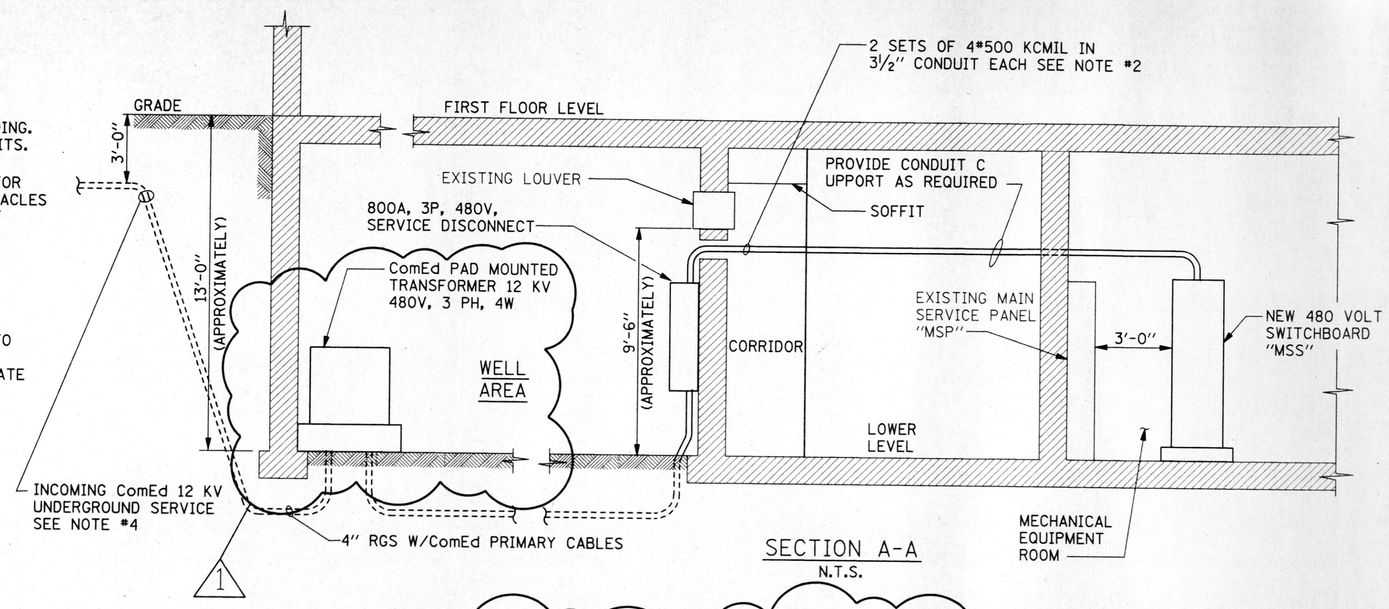

SECTION A-A

N.T.S.

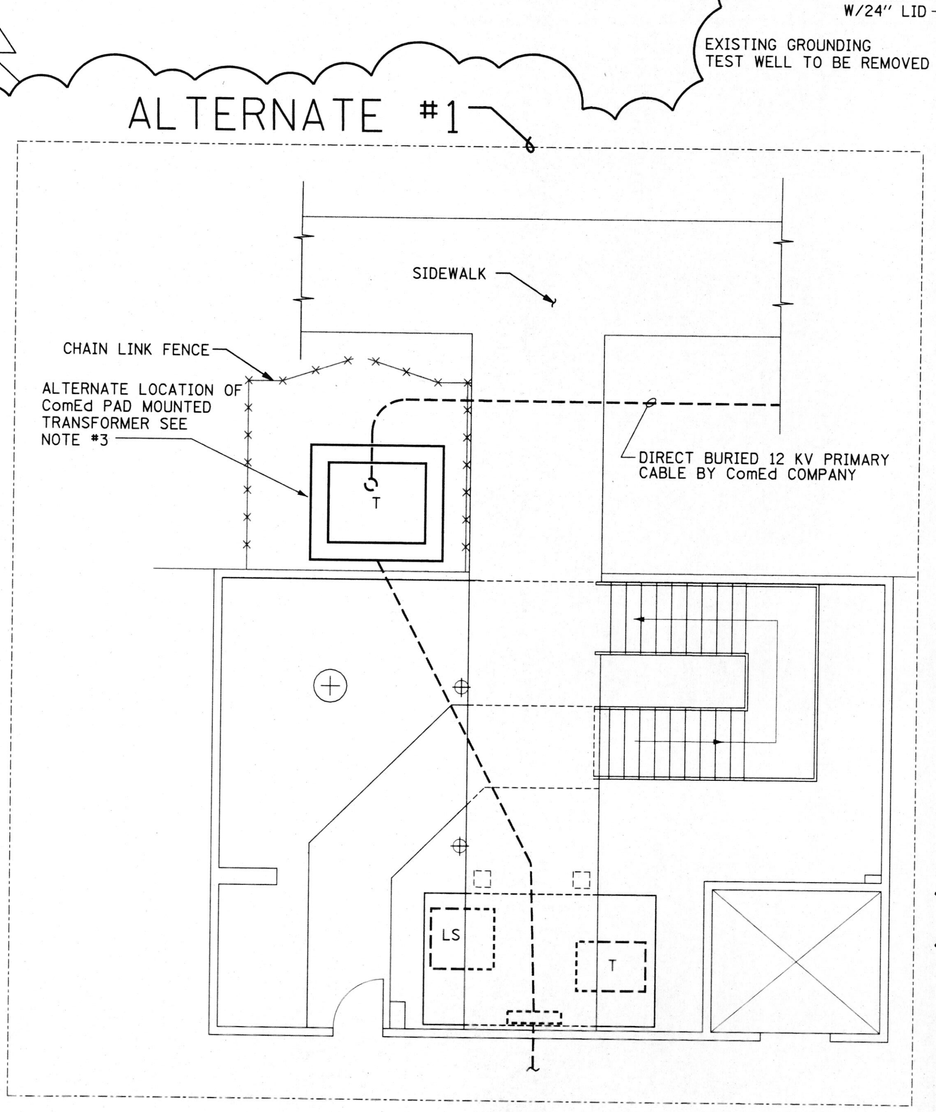

DETAIL 2

ComEd TRANSFORMER ALTERNATE LOCATION

N.T.S.

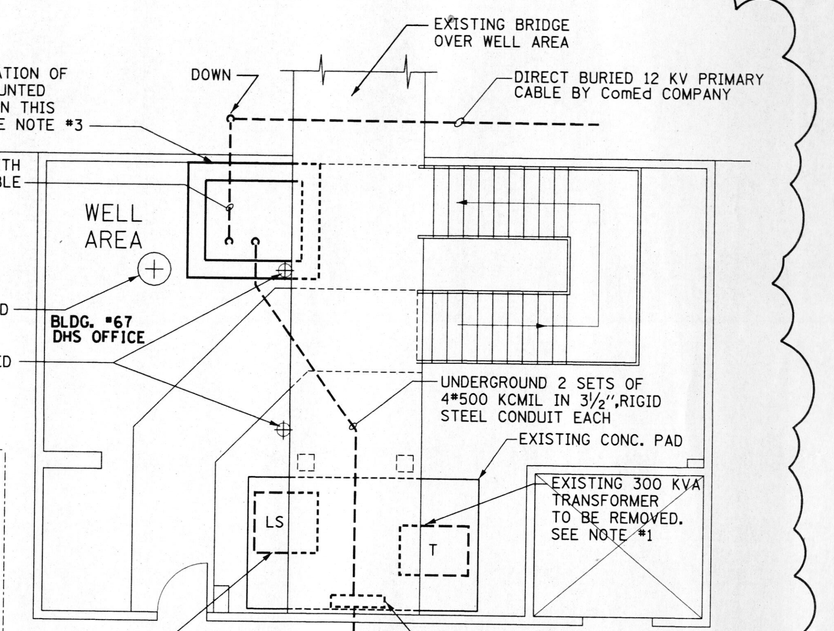

DETAIL 1

N.T.S.

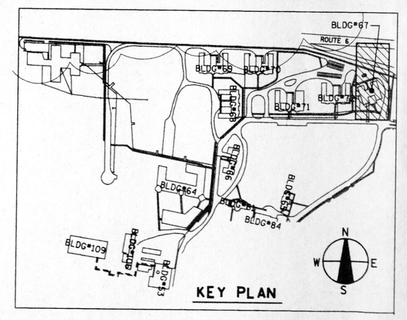

KEY PLAN

REFERENCES:

G-4.....PARTIAL SITE PLAN - NORTH SECTION

AS BUILT

DATE: FEBRUARY 3, 2003

REVISIONS			DRAWN	PREPARED
NO.	DATE	REMARKS TMK	GGL	
1	3-13-01	ADDENDUM #1	TRACED	APPROVED
			CHECKED	APPROVED

SEAL: KEVIN J. VAUGHAN, 37291, LICENSED PROFESSIONAL ENGINEER, ILLINOIS, 11-5-02

SIGNATURE

STV Incorporated

engineers/architects/planners/scientists/construction managers

70 W. MADISON ST. SUITE 2840 CHICAGO, IL 60602

CAPITAL DEVELOPMENT BOARD

State of Illinois

George H. Ryan, Governor

TUNNEL AND STEAM PIPING RENOVATIONS
PARTIAL SITE PLAN AND DETAILS
NORTH SECTION - BUILDING #67

ELGIN MENTAL HEALTH CENTER
750 SOUTH STATE STREET
ELGIN, ILLINOIS 60123

CDB PROJECT NO: 321-055-097 PH-2

DATE: FEBRUARY 3, 2003

SHEET NO: E-17 OF SHEETS

J:#USTN#1642#EPHASE2#E17.DGN

\PROJECTS\1642\Elgin\e2\E17.dgn 02/04/2003 02:01:59 PM

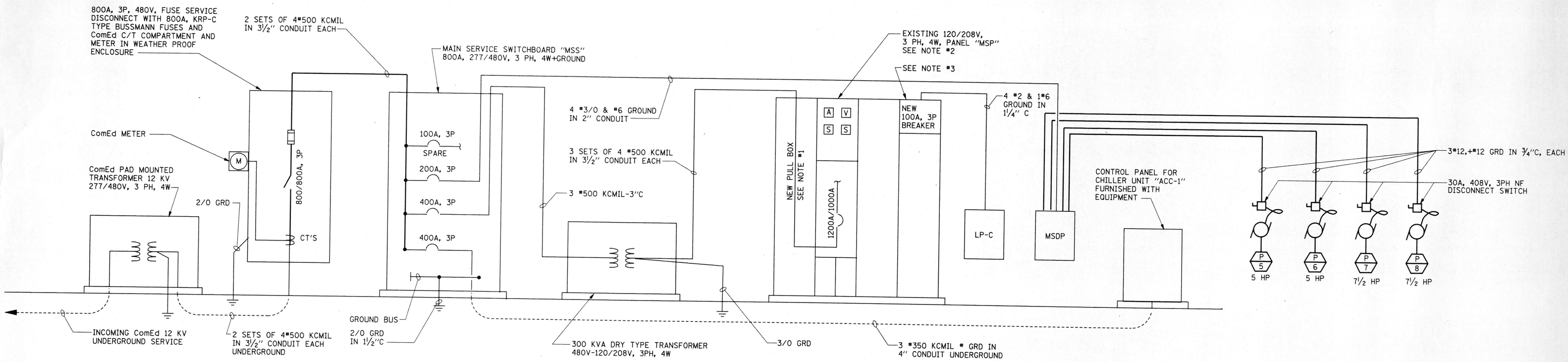

SINGLE LINE DIAGRAM
NTS

MOTOR STARTER DISTRIBUTION PANEL "MSDP" SCHEDULE

(200 AMP MAIN BUS, M.L. ONLY, 277/480 VOLT, 3 PHASE, 4 WIRE PLUS GROUND)

ITEM No.	EQUIPMENT DESCRIPTION TAG	DESCRIPTION	HP	WIRE AND CONDUIT SIZE	CIRCUIT BREAKER SIZE AMP. FRAME/TRIP	MOTOR STARTER NEMA SIZE	CONTROL DEVICE ON COVER H-O-A SEL. SW.	PILOT LIGHT	CONTROL TRANSFORMER	REMARKS
①	—	——	—	——	——	——	——	——	——	PROVISION FOR FUTURE 100 AMP, 3 POLE BREAKER
②	—	——	—	——	——	——	——	——	——	PROVISION FOR FUTURE 100 AMP, 3 POLE BREAKER
③	—	——	—	——	50A	——	——	——	——	SPARE BREAKER
④	—	——	—	——	50A	——	——	——	——	SPARE BREAKER
⑤	P-5	PRIMARY CHILLED WATER PUMP	5	3#12 +#12 GRD	100A/20A	1	V	V	V	
⑥										
⑦	P-6	PRIMARY CHILLED WATER PUMP	5	3#12 +#12 GRD	100A/20A	1	V	V	V	
⑧										
⑨					100A	1	V	V	V	SPARE STARTER
⑩										
⑪					100A	1	V	V	V	SPARE STARTER
⑫										
⑬	P-7	PRIMARY HOT WATER PUMP	7½	3#12 +#12 GRD	100A/20A	1	V	V	V	
⑭										
⑮	P-8	PRIMARY HOT WATER PUMP	7½	3#12 +#12 GRD	100A/20A	1	V	V	V	
⑯										

①	②
③	④
⑤	⑦
⑥	⑧
⑨	⑪
⑩	⑫
⑬	⑮
⑭	⑯

PANEL MSDP
FRONT ELEVATION
NO SCALE

NOTES:

1. FURNISH AND INSTALL NEW PULL BOX ADJACENT TO EXISTING SERVICE PANEL "MSP" THE NEW PULL BOX SHALL BE 24" WIDE AND OF THE SAME HEIGHT AND DEPTH AS EXISTING SERVICE PANEL "MSP".
2. EXISTING SERVICE PANEL "MSP" TO REMAIN. ELECTRICAL CONTRACTOR SHALL DISCONNECT AND REMOVE EXISTING CONDUCTORS SERVING EXISTING PANEL "MSP" AND WIRE WITH NEW CONDUCTORS TO NEW 300 KVA TRANSFORMER, ABANDONING EXISTING CONDUITS. IN WIRING NEW CABLES FROM NEW PULL BOX TO EXISTING 1200 AMP. MAIN CIRCUIT BREAKER ELECTRICAL CONTRACTOR TO INSTALL TWO(2) 5" CONDUIT NIPPLES OF LENGTH AS REQUIRED BETWEEN THE SIDE OF EXISTING PANEL "MSP" AND NEW PULL BOX, SECURING ON BOTH SIDES WITH LOCKNUTS AND BUSHINGS AND COORDINATE IN FIELD ALL WORK AS REQUIRED.
3. ELECTRICAL CONTRACTOR TO FURNISH AND INSTALL NEW 100 AMP, 3P, 208 VOLT CIRCUIT BREAKER IN EXISTING SPACE OF PANEL "MSP" AND WIRE TO NEW PANEL "LP-C" AS REQUIRED.

AS BUILT
DATE: FEBRUARY 3. 2003

REVISIONS NO.	DATE	REMARKS	DRAWN	PREPARED	SEAL
			GGL	TMK	
			TRACED	APPROVED	
			CHECKED	APPROVED	

STV Incorporated
engineers/architects/planners/scientists/construction managers
70 W. MADISON ST. SUITE 2840 CHICAGO, IL 60602

CAPITAL DEVELOPMENT BOARD

State of Illinois
George H. Ryan, Governor

TUNNEL AND STEAM PIPING RENOVATIONS
ELECTRICAL SINGLE LINE DIAGRAM, PANEL DETAIL AND SCHEDULE - BUILDING #67

ELGIN MENTAL HEALTH CENTER
750 SOUTH STATE STREET
ELGIN, ILLINOIS 60123

CDB PROJECT NO: 321-055-097 PH-2
DATE: FEBRUARY 3, 2003
SHEET NO: E-18
OF SHEETS

\PROJECTS\1842\Elphase\E18.dgn 02/04/2003 02:08:41 PM

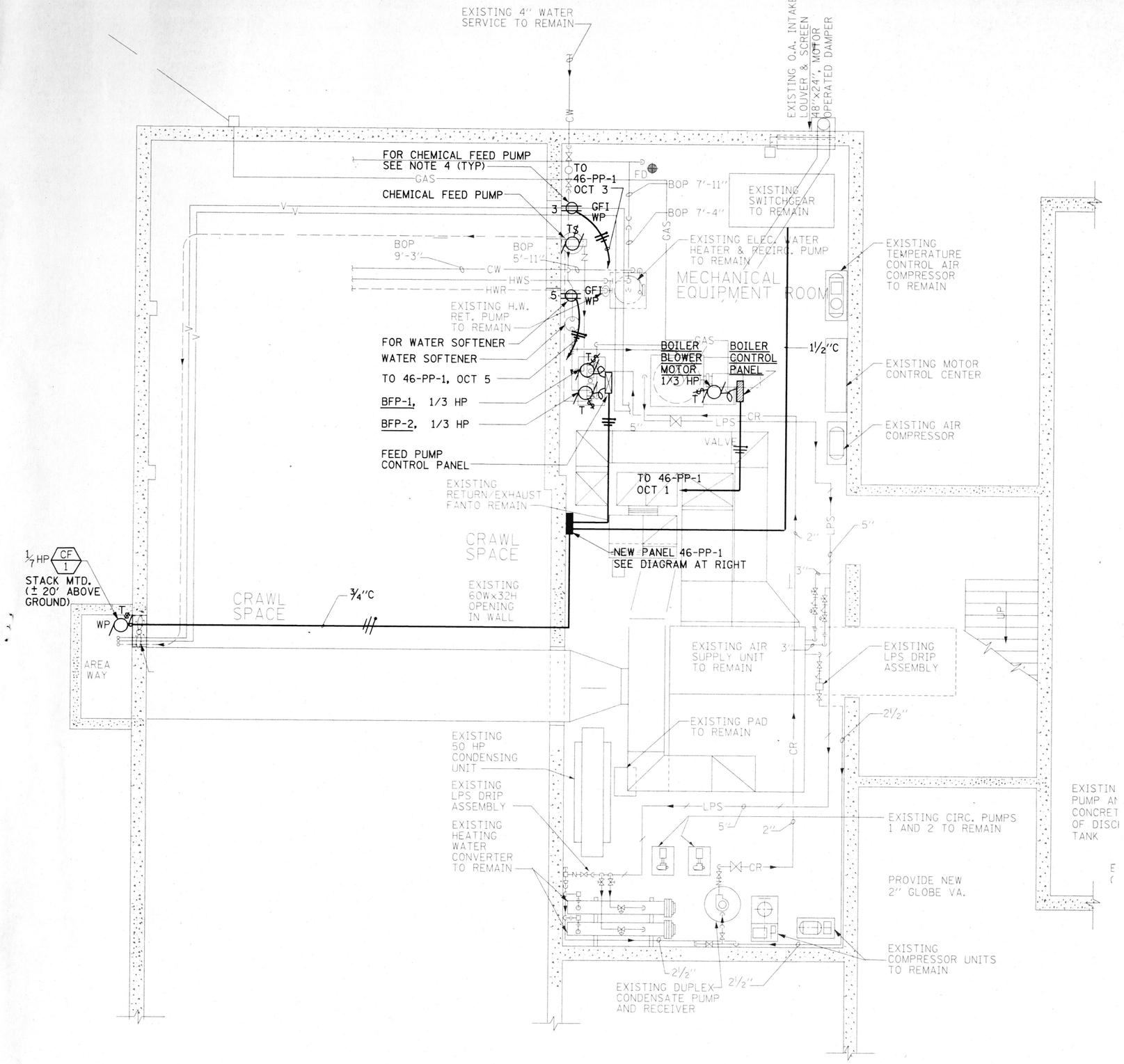

ELECTRICAL POWER PLAN BUILDING #46
(MENDEL BUILDING)
SCALE: 1/4"=1'-0"

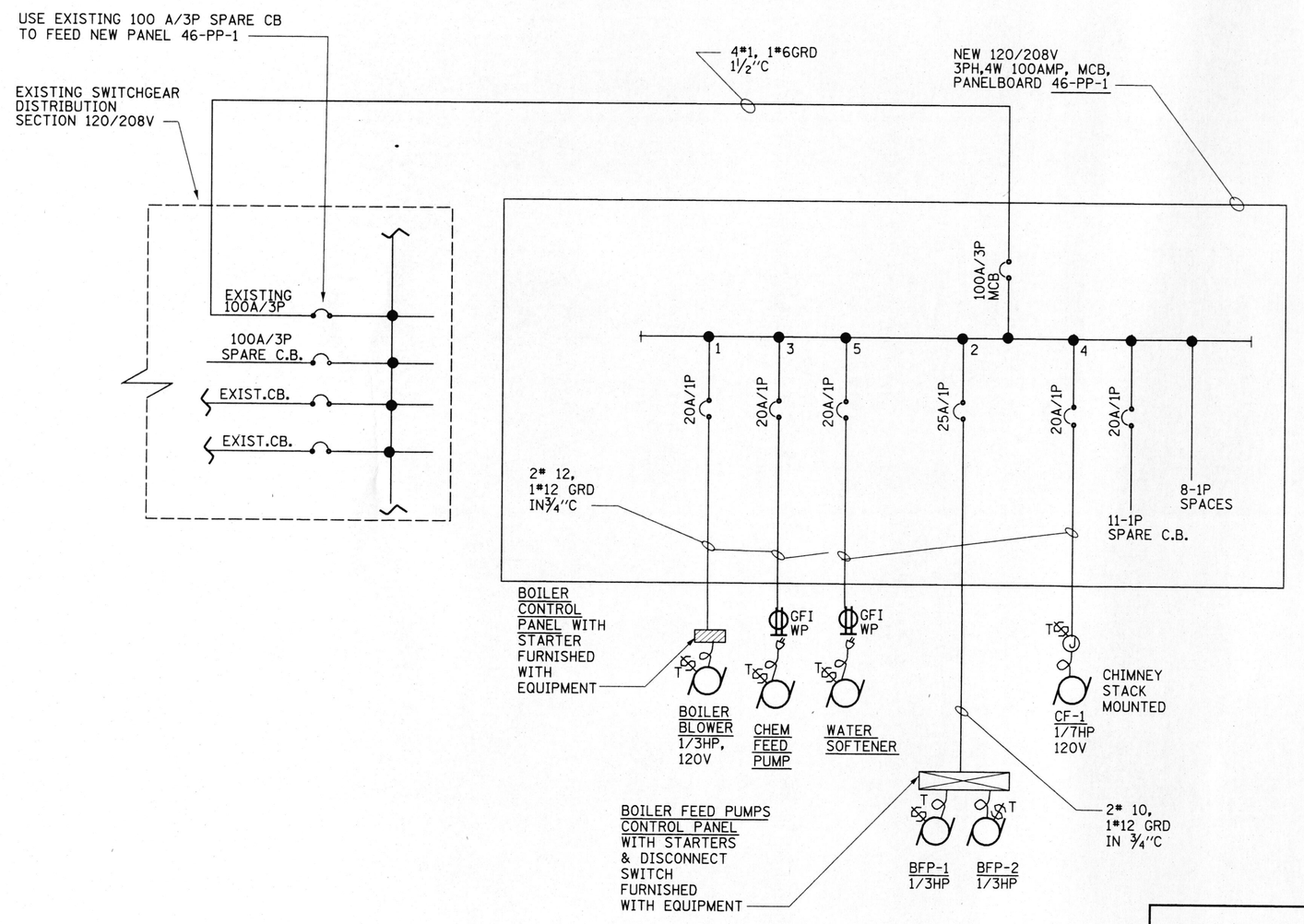

PARTIAL SINGLE LINE POWER DIAGRAM
N.T.S.

AS BUILT
DATE: FEBRUARY 3, 2003

REFERENCE:

M-24....NEW PIPING AND MECHANICAL EQUIPMENT ROOM PLAN-BLDG. #46

NOTES:

1. REFER TO DWG. E-1 FOR SYMBOL LIST GENERAL NOTES & MECHANICAL EQUIPMENT ELECTRICAL CONNECTION SCHEDULE.
2. FURNISH & INSTALL A NEW 100A 120/208V, 3PH, 4W PANELBOARD 46-PP-1, WITH SOLID NEUTRAL BUS, GROUND BUS BAR, 100A/3POLE MAIN CIRCUIT BREAKER & BOLT-ON TYPE CIRCUIT BREAKER AS SHOWN IN THE DIAGRAM.
3. DISCONNECT, RELOCATE AND RECONNECT LIGHTING FIXTURES IN THE AREA OF CONTRUCTION TO ACCOMODATE NEW EQUIPMENT INSTALLATION. PROVIDE TEMPORARY LIGHTING AS REQUIRED.
4. VERIFY EQUIPMENT PLUG CONFIGURATION AND PROVIDE MATCHING RECEPTACLE.
5. REFER TO MECHANICAL DRAWINGS FOR EXACTEQUIPMENT LOCATION AND EQUIPMENT SCHEDULE.

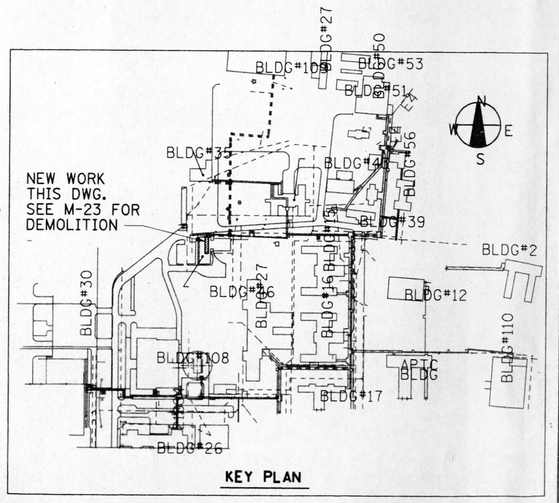

REVISIONS			DRAWN	PREPARED
NO.	DATE	REMARKS	GGL	
			TRACED	APPROVED
			CHECKED	APPROVED

SEAL: KOSTAS J. VASILION, 37259, REGISTERED PROFESSIONAL ENGINEER, ILLINOIS

SIGNATURE

STV Incorporated
engineers/architects/planners/scientists/construction managers
70 W. MADISON ST. SUITE 2840 CHICAGO, IL 60602

CAPITAL DEVELOPMENT BOARD

State of Illinois
George H. Ryan, Governor

TUNNEL AND STEAM PIPING RENOVATIONS
ELECTRICAL POWER PLAN & SINGLE LINE DIAGRAM. BUILDING #46 (MENDEL BUILDING)
ELGIN MENTAL HEALTH CENTER
750 SOUTH STATE STREET
ELGIN, ILLINOIS 60123

CDB PROJECT NO: 321-055-097 PH-2
DATE: FEBRUARY 3, 2003
SHEET NO: E-19
OF SHEETS

S:\ELEC\01642-Elphase2\E19.dgn 02/04/2003 02:11:45 PM

GENERAL NOTES - STRUCTURAL

A. DESIGN SPECIFICATIONS

STRUCTURAL DESIGN - THE STRUCTURAL PROVISIONS OF THE BUILDING OFFICIALS AND CODE ADMINISTRATORS (BOCA), NATIONAL BUILDING CODE - WILL GOVERN.

STRUCTURAL STEEL - DESIGNED IN ACCORDANCE WITH THE AMERICAN INSTITUTE OF STEEL CONSTRUCTION SPECIFICATION (AISC), THE "MANUAL OF STEEL CONSTRUCTION", ALLOWABLE STRESS DESIGN, NINTH EDITION.

STRUCTURAL WELDING - DESIGNED IN ACCORDANCE WITH THE AMERICAN WELDING SOCIETY SPECIFICATION AWS D1.1.

STRUCTURAL CONCRETE - DESIGNED IN ACCORDANCE WITH THE AMERICAN CONCRETE INSTITUTE (ACI), BUILDING CODE REQUIREMENTS FOR REINFORCED CONCRETE (ACI 318) "LATEST EDITION"

1. DESIGN LOADING

	UNIFORM LOAD - 250 POUNDS PER SQUARE FOOT, IN ACCORDANCE WITH BOCA REQUIREMENTS
	WHEEL LOAD - 8.0 KIPS, IN ACCORDANCE WITH AASHTO REQUIREMENTS.
EARTH PRESSURE:	60 pcf+2'-0 SURCHARGE FOR LIVE LOAD IN ACCORDANCE WITH AASHTO REQUIREMENTS

2. DESIGN METHOD

STRUCTURAL STEEL: -	SERVICE LOAD
ALL OTHER STRUCTURAL ELEMENTS:	LOAD FACTOR
IMPORTANCE FACTOR: -	ESSENTIAL FACILITY

B. STRUCTURAL STEEL

1. ALL STRUCTURAL STEEL SHAPES AND PLATES SHALL BE TYPE ASTM A-36, UNLESS OTHERWISE NOTED ON THE PLANS.
2. WELDED CONNECTIONS SHALL BE MADE WITH TYPE E70XX ELECTRODES COMPATIBLE WITH EACH INDIVIDUAL APPLICATION.
3. ALL STRUCTURAL BOLTS SHALL BE HEAVY HEX HEAD HIGH STRENGTH BOLTS, ASTM A-325, TYPE 1, AND ALL HOLES SHALL BE 1/16" LARGER THAN BOLT DIAMETER UNLESS OTHERWISE NOTED ON THE PLANS.
4. ALL STRUCTURAL NUTS SHALL BE HEAVY HEX CONFORMING TO ASTM A536-DH. STRUCTURAL WASHERS SHALL BE HARDENED CONFORMING TO ASTM A436.
5. ALL CONTACT SURFACES ON THE NEW STEEL INCLUDING THOSE ADJACENT TO THE BOLT HEADS, NUTS, OR WASHERS SHALL BE FREE OF SCALE, BURRS, DIRT, AND OTHER FOREIGN MATERIALS, AND SHALL ALSO BE FREE OF OIL, LACQUER, OR OTHER COATINGS THAT WOULD PREVENT SOLID SEATING OF THE PARTS.
6. PAINTING OF NEW STRUCTURAL STEEL SHALL BE AS SPECIFIED. PRIMER PAINT TO BE APPLIED PRIOR TO ITS DELIVERY TO THE SITE AND FINISH PAINT FOLLOWING STEEL ERECTION. ALL DAMAGED PAINT SHALL BE TOUCHED-UP IN THE FIELD. ALL BOLTS, NUTS, AND WASHERS SHALL BE PAINTED IN THE FIELD AFTER INSTALLATION.

C. CONCRETE WORK

1. CAST-IN-PLACE CONCRETE SHALL BE CLASS SI CONCRETE HAVING A MINIMUM COMPRESSION STRENGTH OF f'c = 4,000 PSI IN 28 DAYS.
2. CONCRETE SHALL CONFORM TO THE REQUIREMENTS OF READY-MIXED CONCRETE ASTM C94.
3. ALL EXPOSED EDGES AND CORNERS SHALL BE CHAMFERED 3/4 INCH, UNLESS OTHERWISE NOTED ON THE PLANS.
4. DEFORMED REINFORCING BARS SHALL CONFORM TO ASTM A615, GRADE 60.
5. REINFORCEMENT CLEAR COVERAGE, UNLESS OTHERWISE NOTED, SHALL BE AS FOLLOWS:
   a. CONCRETE CAST AGAINST AND PERMANENTLY EXPOSED TO EARTH - 3" INCHES.
   b. CONCRETE EXPOSED TO EARTH AND TOP REINFORCEMENT IN ROADWAY SLABS 2" INCHES.
   c. ALL OTHER CONCRETE - 1 1/2 INCHES.

D. EARTHWORK

1. REMOVE ALL UNCLASSIFIED EXCAVATED AND DEMOLISHED MATERIAL TO AN APPROVED OFF-SITE DISPOSAL AREA.

E. GENERAL

1. PLAN DIMENSIONS AND DETAILS RELATING TO EXISTING STRUCTURES HAVE BEEN TAKEN FROM EXISTING PLANS, AND MODIFIED AS NECESSARY FROM FIELD MEASUREMENTS. IT SHALL BE THE CONTRACTOR'S RESPONSIBILITY TO VERIFY THESE DIMENSIONS AND SUBMIT ANY DEVIATIONS WITH SUPPORTIVE SURVEY NOTES AND DRAWINGS FOR REVIEW AND APPROVAL OF SUCH VARIATIONS SHALL NOT BE CAUSE FOR ADDITIONAL COMPENSATION FOR A CHANGE IN SCOPE OR WORK. THIS SHALL BE DONE BEFORE THE COMMENCEMENT OF CONSTRUCTION AND PREPARATION OF THE SHOP DRAWINGS FOR THE STRUCTURAL STEEL OR CONCRETE REINFORCING BARS.
2. DO NOT SCALE PLANS FOR CONSTRUCTION DIMENSIONS.
3. WORK THESE DRAWINGS IN ACCORDANCE WITH THE PROJECT SPECIFICATIONS.
4. SEVEN (7) DRAIN LINES FOR AIR VENTS FOR EXISTING CONSTRUCTION ARE TO BE CLOSED BY FILLING WITH GROUT.
5. REPAIR 400 LINEAL FEET OF EXISTING TUNNEL WALL CRACKS IN ACCORDANCE WITH THE SPECIFICATIONS, SHEETS G-3 AND S-4, THIS SET.
6. SEE DRAWING M-37 FOR STRUCTURAL ALTERATIONS TO BUILDING No. 67 TO ACCOMMODATE NEW MECHANICAL EQUIPMENT.

F. DRAWING SYMBOLS

THE FOLLOWING SYMBOLS HAVE BEEN USED THROUGHOUT THE STRUCTURAL DRAWINGS.

1. TUNNEL ROOF REPAIR REQUIRED.

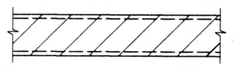

2. NO TUNNEL ROOF REPAIR REQUIRED.

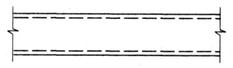

3. PIPE SUPPORT LOCATION.

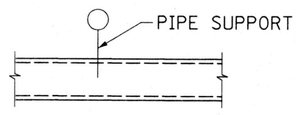

4. PIPE ANCHOR LOCATION.

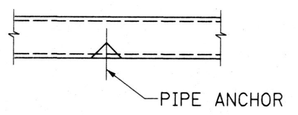

5. EXISTING TUNNEL EXPANSION AREA

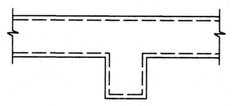

6. NEW ENLARGEMENT AREA

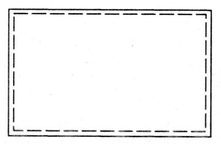

GENERAL NOTES - CONSTRUCTION

A. UNDER NO CIRCUMSTANCES SHALL EXISTING PIPES BE DISTURBED OR DAMAGED DURING TUNNEL REHABILITATION OR CONSTRUCTION. THE CONTRACTOR SHALL BE FULLY RESPONSIBLE FOR ANY DAMAGE DONE TO PIPES DURING THESE PROCEDURES.

B. CONSTRUCTION SEQUENCE - EXISTING TUNNEL ROOF REHABILITATION

1. INSTALL TUNNEL BULKHEADS AT EACH END OF CONSTRUCTION ZONE, AND BARRICADE PERIMETER OF CONSTRUCTION ZONE TO PREVENT UNAUTHORIZED PERSONNEL FROM ENTERING THE CONSTRUCTION ZONE OR TUNNELS.
2. INSTALL SHORING BETWEEN TUNNEL WALLS AT AN APPROPRIATE SPACING TO RESIST EARTH PRESSURE AND CONSTRUCTION EQUIPMENT SURCHARGE.
3. INSTALL CORRUGATED SHEETING PIPE SHIELD INSIDE TUNNEL, BELOW ROOF.
4. REMOVE DETERIORATED ROOF AS NOTED ON PLANS.
5. REMOVE PIPE SHIELD.
6. REMOVE EXISTING PIPE SUPPORTS AND INSTALL NEW PIPE SUPPORTS. SHORE PIPING AS REQUIRED.
7. INSTALL 2,900 SQ. FT. OF NEW TUNNEL ROOF AS SHOWN ON PLANS. FOLLOWING COMPLETE TUNNEL ROOF CONCRETE CURING, SQUEEGE SIKADUR 55SLV-2 COMPONENT ONTO TOP OF TUNNEL ROOF AREA, AND BROADCAST FINE SAND ONTO THE SURFACE DURING DRYING. IN ADDITION, APPLY ABOVE TOPPING TO 20,200 SQ. FT. TO OTHER EXISTING TUNNEL ROOF AREAS, EXPANSION ROOF AREAS AND ENLARGEMENT ROOF AREAS, AS DIRECTED BY THE CONSTRUCTION MANAGER.
8. REMOVE 7 EXISTING HATCH COVERS AND SEAL AS SHOWN ON SHEET S-6.
9. REMOVE BULKHEADS.
10. REMOVE SHORING WHEN CONCRETE HAS ACHIEVED fc = 4,000 psi.

C. CONSTRUCTION SEQUENCE - EXISTING TUNNEL WALL REHABILITATION

1. INSTALL NEW EXPANDING POLYURETHANE CHEMICAL GROUT INTO CRACK, FILL CRACK COMPLETELY.

N.I.C.

D. CONSTRUCTION SEQUENCE - NEW TUNNEL EXPANSION AREA

NEW EXPANSION AREA CONSTRUCTION WILL OCCUR IN CONJUNCTION WITH EXISTING TUNNEL REHABILITATION AND SHALL BE INCLUDED IN THE CONSTRUCTION SEQUENCE THEREOF.

THE FOLLOWING NOTES SHALL ALSO BE ADHERED TO IF APPLICABLE.

1. EXCAVATE AS REQUIRED FOR EXPANSION AREA, AND INSTALL PERIMETER BARRICADE
2. INSTALL CORRUGATED SHEETING PIPE SHIELD INSIDE EXISTING INTERSECTING TUNNELS, BELOW ROOF.
3. REMOVE EXISTING TUNNEL ROOF AS REQUIRED.
4. REMOVE PIPE SHIELD.
5. SHORE PIPING AS REQUIRED IN NEW EXPANSION AREA.
6. REMOVE EXISTING TUNNEL WALLS, FLOOR AND PIPE SUPPORTS AS REQUIRED.
7. INSTALL NEW EXPANSION FLOOR SLAB.
8. INSTALL NEW EXPANSION WALLS AND PIPE SUPPORTS.
9. INSTALL NEW EXPANSION AREA ROOF.
10. BACKFILL USING AN APPROVED MATERIAL AS PER PARAGRAPH C.

E. CONSTRUCTION SEQUENCE - NEW ENLARGEMENT AREAS

1. EXCAVATE AS REQUIRED FOR ENLARGEMENT AREA, AND INSTALL PERIMETER BARRICADE.
2. INSTALL NEW ENLARGEMENT FLOOR SLAB.
3. INSTALL NEW ENLARGEMENT WALLS.
4. FOLLOWING PIPE AND MECHANICAL EQUIPMENT INSTALLATION INSTALL NEW ENLARGEMENT AREA ROOF, COMPLETE WITH OUTSIDE AIR INTAKE/EXHAUST GRATING.
5. BACKFILL USING AN APPROVED MATERIAL.

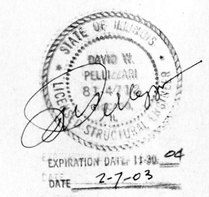

AS BUILT

DATE: FEBRUARY 3, 2003

REVISIONS			DRAWN	PREPARED	SEAL
NO.	DATE	REMARKS	M.A.K. SGL	R.R.M	
			TRACED	APPROVED	
			CHECKED J.A.D. P.M.	APPROVED D.B.P.	

STV Incorporated
engineers/architects/planners/scientists/construction managers
70 W. MADISON ST. SUITE 2840 CHICAGO, IL 60602

CAPITAL DEVELOPMENT BOARD

State of Illinois
George H. Ryan, Governor

TUNNEL AND STEAM PIPING RENOVATIONS
PHASE 2
GENERAL NOTES

ELGIN MENTAL HEALTH CENTER
750 SOUTH STATE STREET
ELGIN, ILLINOIS 60123

CDB PROJECT NO: 321-055-097 PH-2
DATE FEBRUARY 3, 2003
SHEET NO: S-1
OF SHEETS

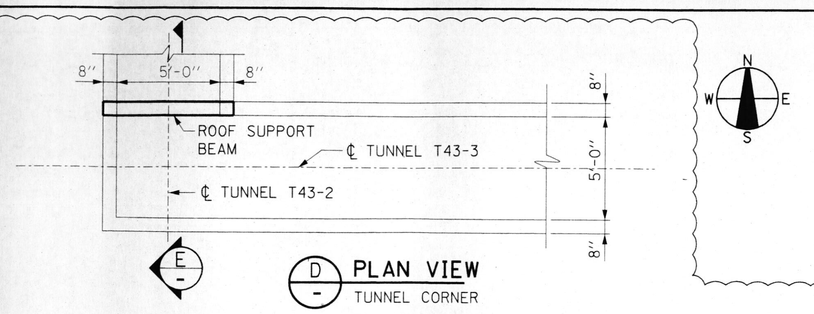

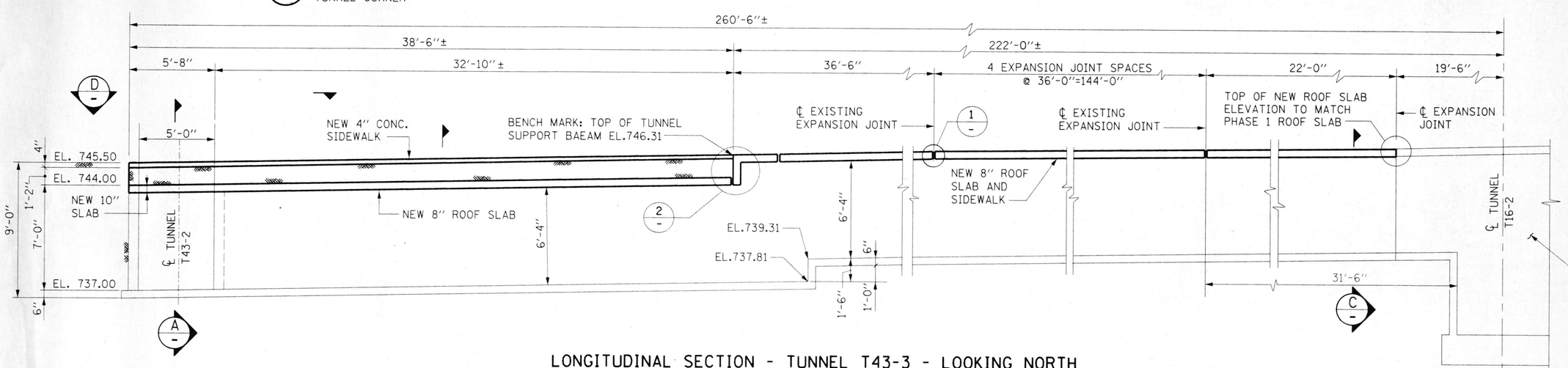

LONGITUDINAL SECTION - TUNNEL T43-3 - LOOKING NORTH

SCALE: NTS

N.I.C.

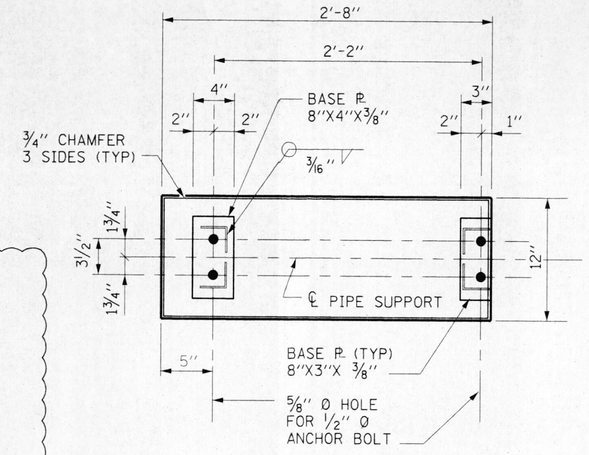

B1 SECTION
SCALE: 1½"=1'-0"

NOTE:
PIPE SUPPORT DETAIL GIVEN IN THE EVENT THAT A PIPE SUPPORT NEEDS TO BE REPLACED.

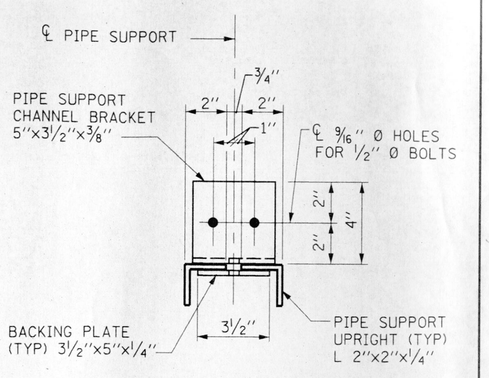

B2 SECTION
SCALE: 3"=1'-0"

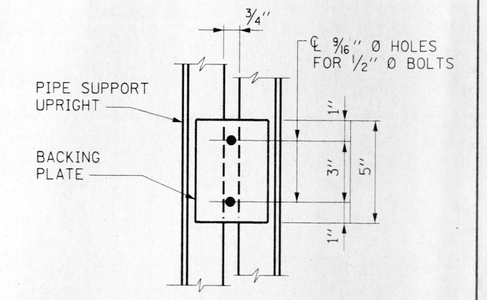

B3 SECTION
SCALE: 3"=1'-0"

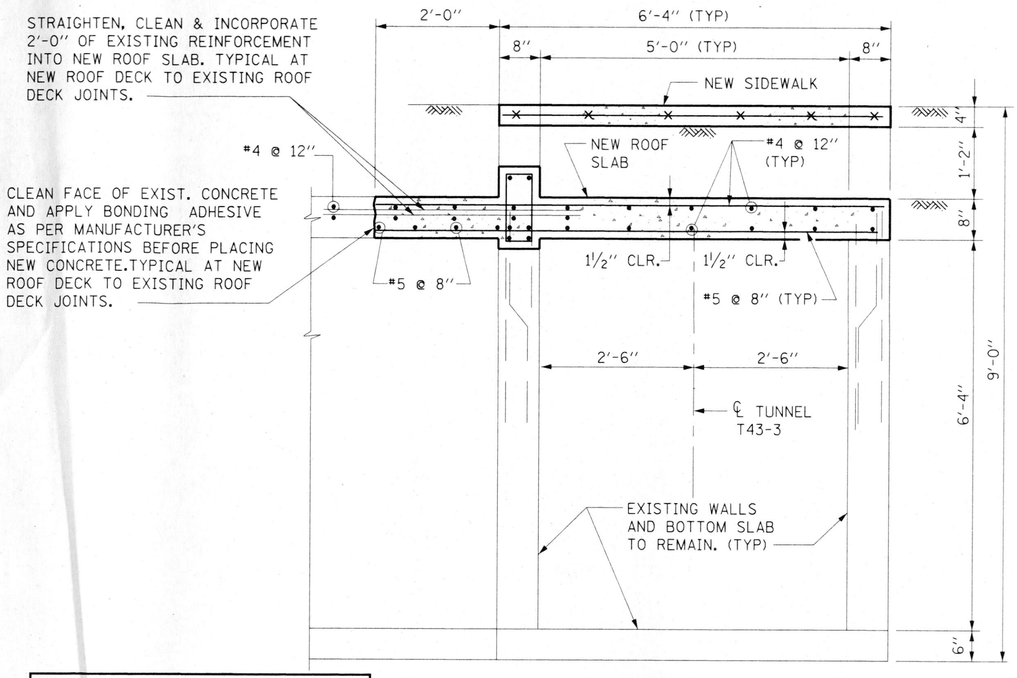

A SECTION
SCALE: ¾"=1'-0"
(LOOKING EAST)

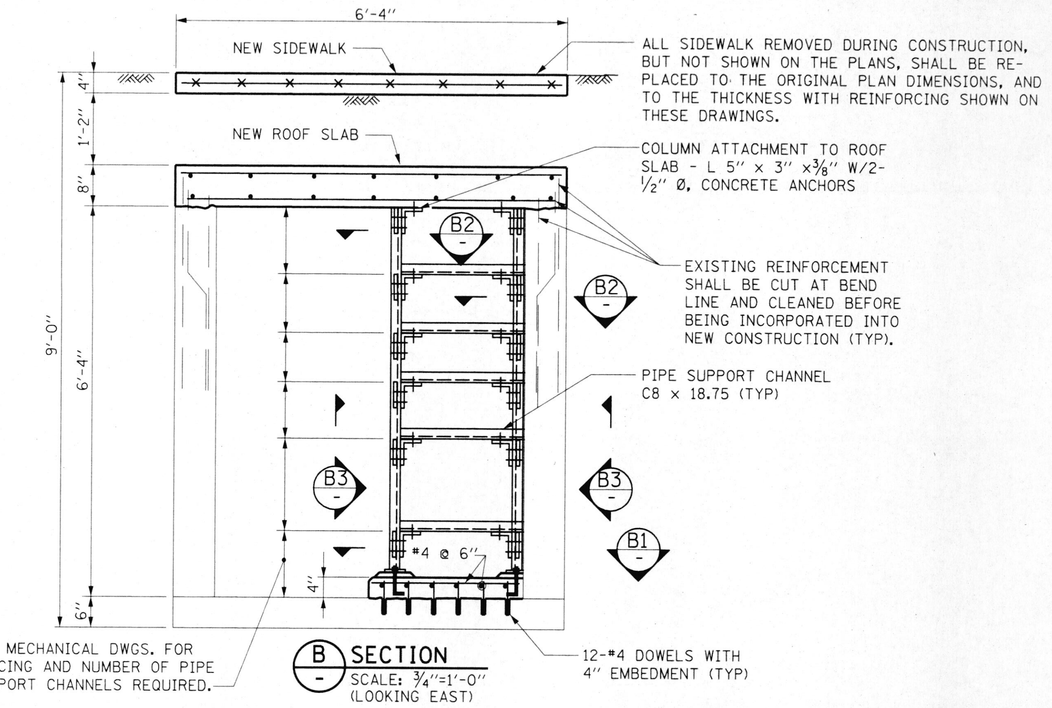

B SECTION
SCALE: ¾"=1'-0"
(LOOKING EAST)

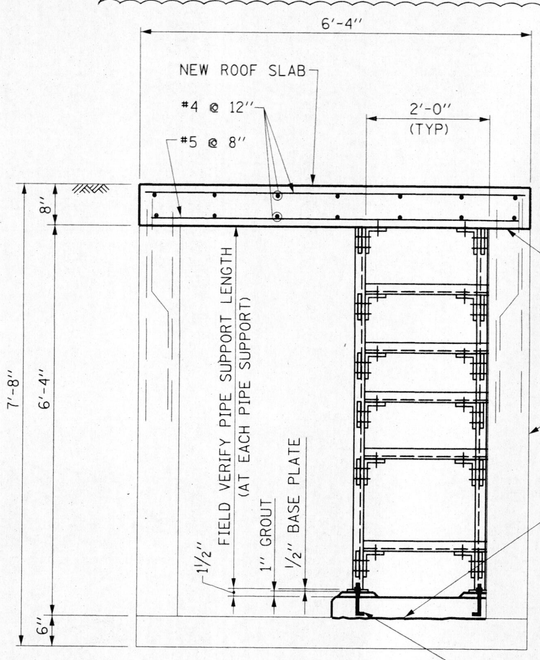

C SECTION
SCALE: ¾"=1'-0"
(LOOKING EAST)

AS BUILT
DATE: FEBRUARY 3. 2003

1A

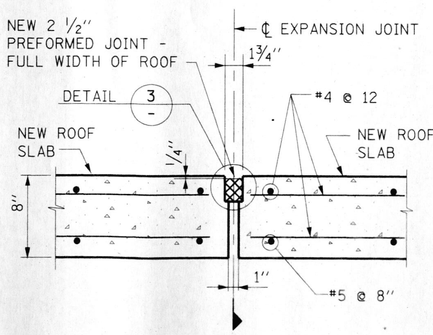

1 DETAIL
(TYP. UNLESS NOTED)
SCALE: 1½"=1'-0"

1AB

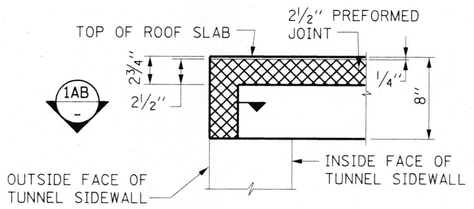

1A SECTION
SCALE: 1½"=1'-0"

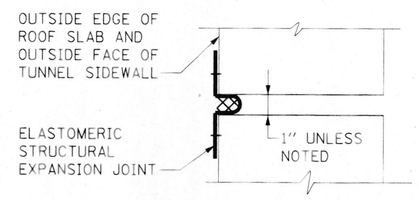

1AB SECTION
SCALE: 3"=1'-0"

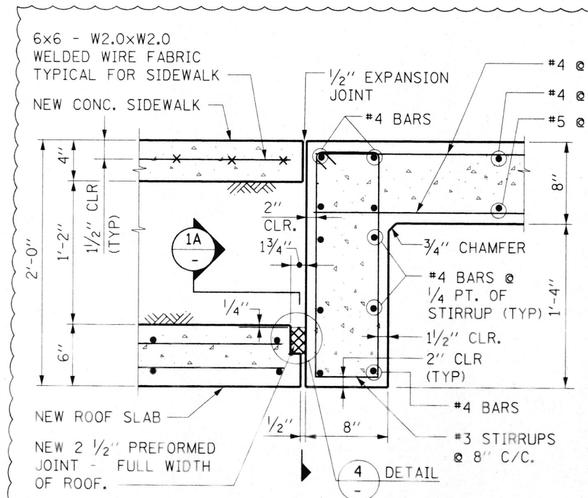

2 DETAIL
SCALE: 1½"=1'-0"

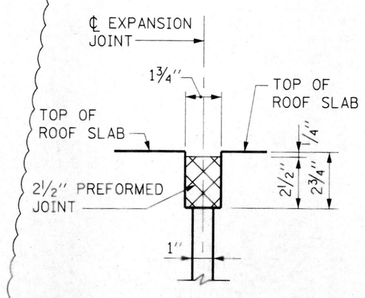

3 DETAIL-TYPICAL
SCALE: 3"=1'-0"

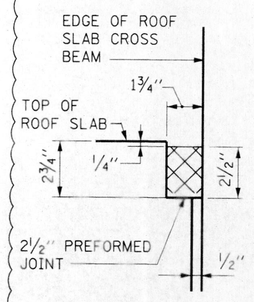

4 DETAIL
SCALE: 3"=1'-0"

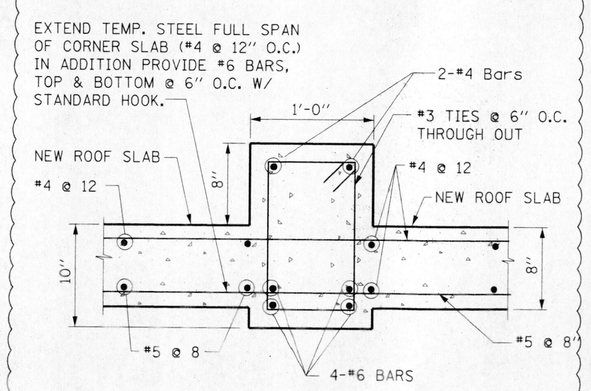

E SECTION
SCALE: 1½"=1'-0"

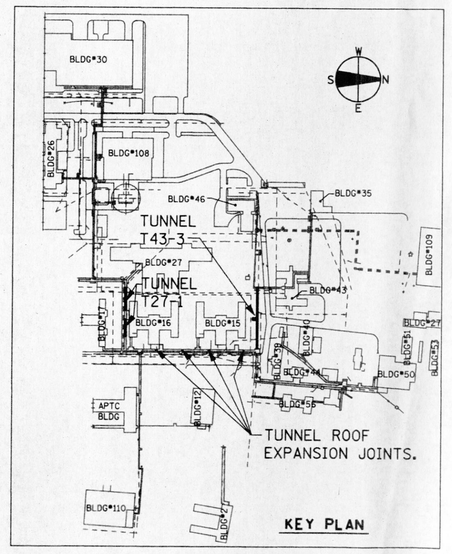

NOTE: WORK THIS SHEET WITH SHEETS G-3, S-1 AND S-3

REVISIONS			DRAWN	PREPARED	SEAL
NO.	DATE	REMARKS	M.A.K.	R.P.M.	
			TRACED	APPROVED	
			CHECKED	APPROVED	
			J.A.B./R.P.M.	D.B.Z.	

STV Incorporated
engineers/architects/planners/scientists/construction managers
70 W. MADISON ST. SUITE 2840 CHICAGO, IL 60602

CAPITAL DEVELOPMENT BOARD

State of Illinois
George H. Ryan, Governor

TUNNEL AND STEAM PIPING RENOVATIONS
PHASE 2. TUNNEL T43-3
LONGITUDINAL SECTION. SECTIONS & DETAILS

ELGIN MENTAL HEALTH CENTER
750 SOUTH STATE STREET
ELGIN. ILLINOIS 60123

CDB PROJECT NO: 321-055-097 PH-2
DATE: FEBRUARY 3. 2003
SHEET NO: S-2
OF SHEETS

PROJECTS\116AP\STRUCTS\02.DGN 02/04/2003 02:23:30 PM

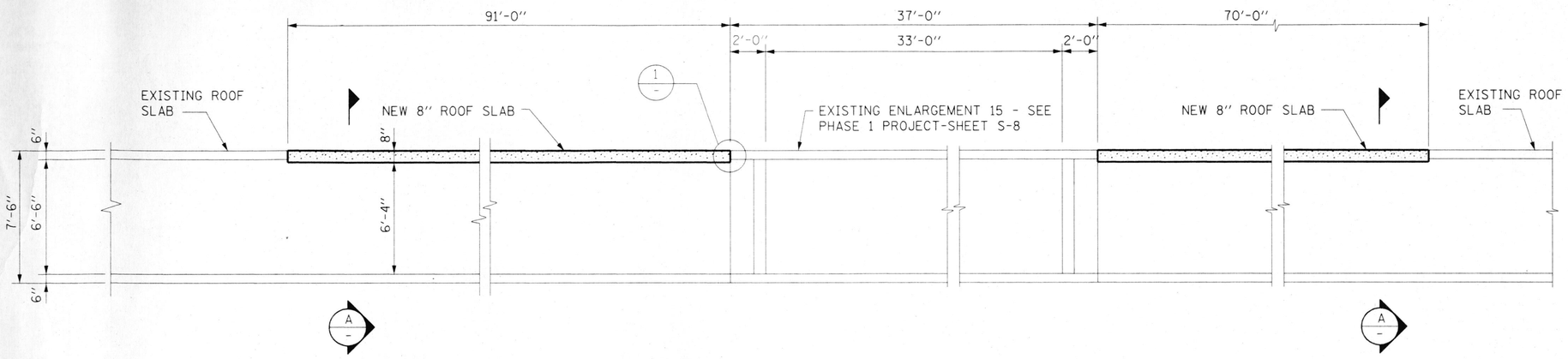

LONGITUDINAL SECTION - TUNNEL T27-1 - LOOKING NORTH

SCALE : 1/4"=1'-0"

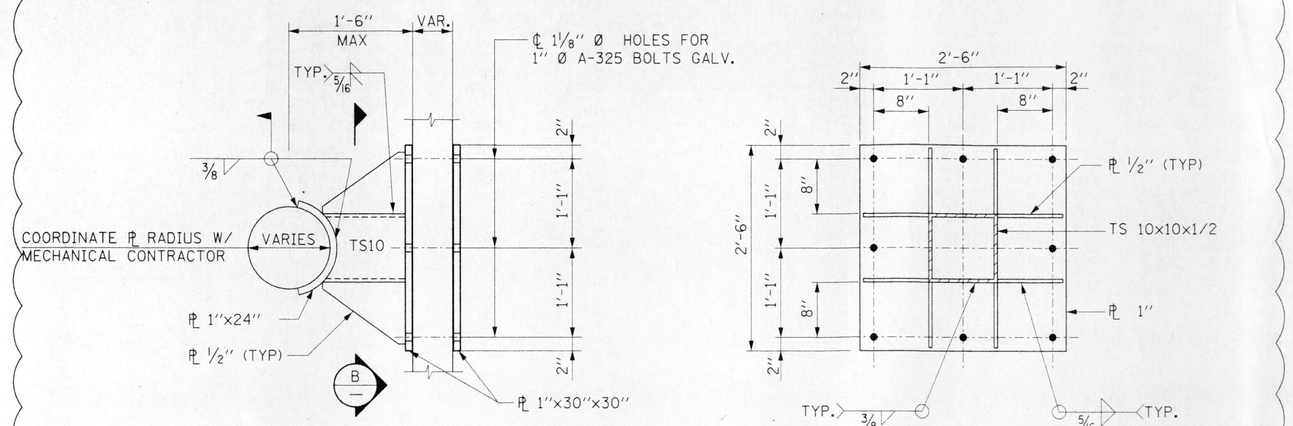

PIPE ANCHOR DETAIL

SCALE : 1"=1'-0"
(SEE SHEET M-13 FOR LOCATION)

B SECTION

SCALE : 1"=1'-0"

N.I.C.

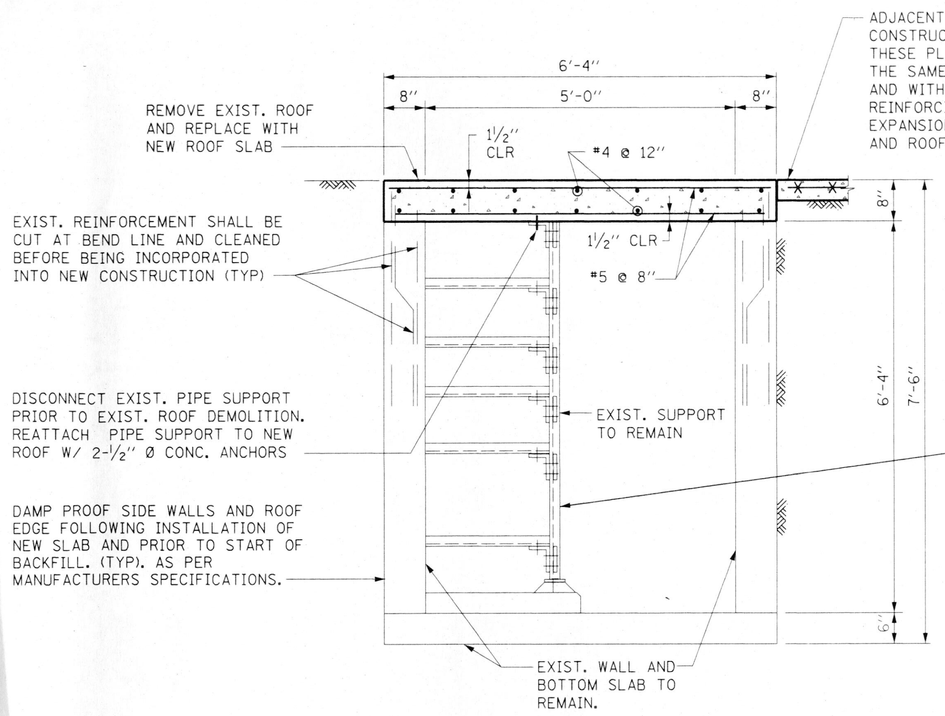

A SECTION

SCALE: 3/4"=1'-0"
(LOOKING EAST)

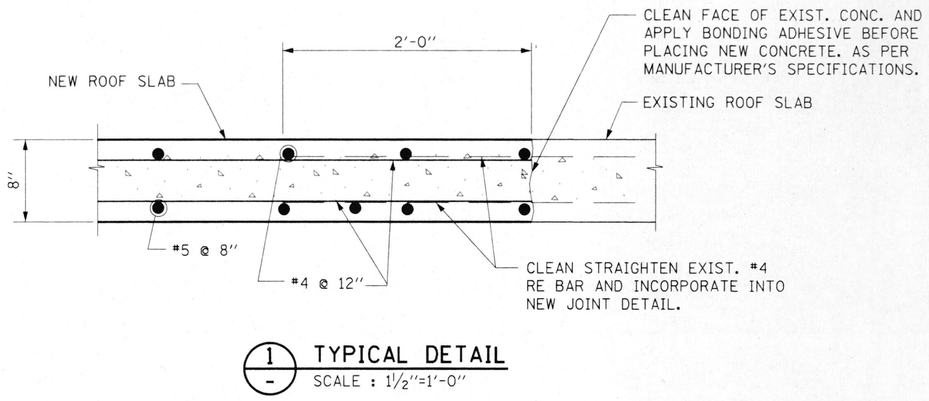

1 TYPICAL DETAIL

SCALE : 1½"=1'-0"

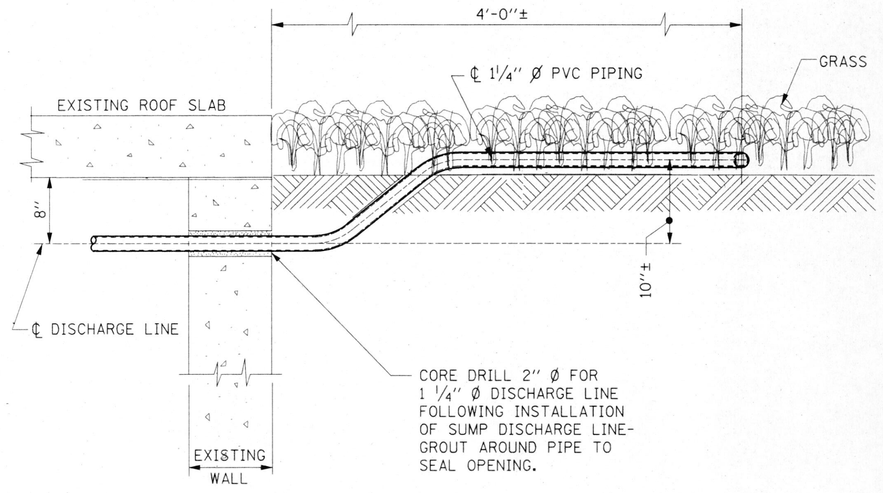

2 TYPICAL DETAIL

SCALE : NONE

M-1, M-2 & G-3

NOTE: APPROX. 400 LINEAL FEET OF CRACK SEALING IS REQUIRED.

VIEW - WALL CRACK REPAIR (TYP)

SCALE : NO SCALE

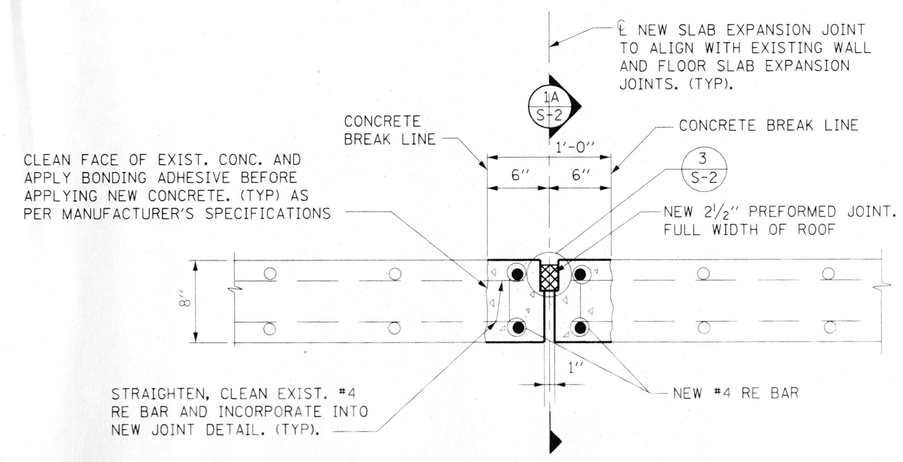

CROSS SECTION THRU ROOF BY PIPE SUPPORTS 68,82,93 AND 104

SCALE : 1½"=1'-0"
(SEE SHEET G-3 FOR LOCATION)

DAVID W. [illegible]
EXPIRATION DATE: 11-30-04
DATE 2-7-03

AS BUILT

DATE: FEBRUARY 3, 2003

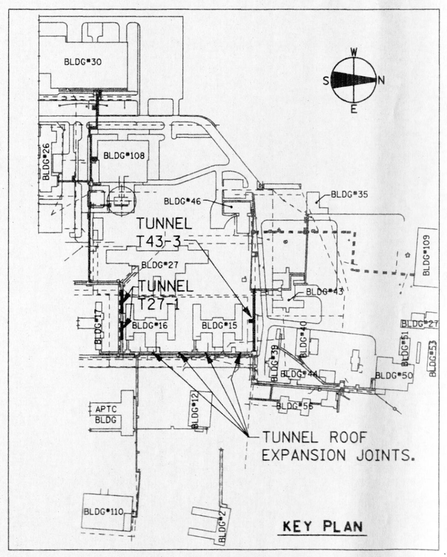

NOTE : WORK THIS SHEET WITH SHEETS G-3, S-1, AND S-2

REVISIONS			DRAWN	PREPARED	SEAL
NO.	DATE	REMARKS	M.A.K	R.P.M	
			TRACED	APPROVED	
			CHECKED	APPROVED	
			J.A.B./R.P.M.	D.B.Z	

STV Incorporated
engineers/architects/planners/scientists/construction managers
70 W. MADISON ST. SUITE 2840 CHICAGO, IL 60602

CAPITAL DEVELOPMENT BOARD

State of Illinois
George H. Ryan, Governor

TUNNEL AND STEAM PIPING RENOVATIONS
PHASE 2, TUNNEL T27-1
LONGITUDINAL SECTION AND DETAILS

ELGIN MENTAL HEALTH CENTER
750 SOUTH STATE STREET
ELGIN, ILLINOIS 60123

CDB PROJECT NO: 321-055-097 PH-2
DATE: FEBRUARY 3, 2003
SHEET NO: S-4
OF SHEETS

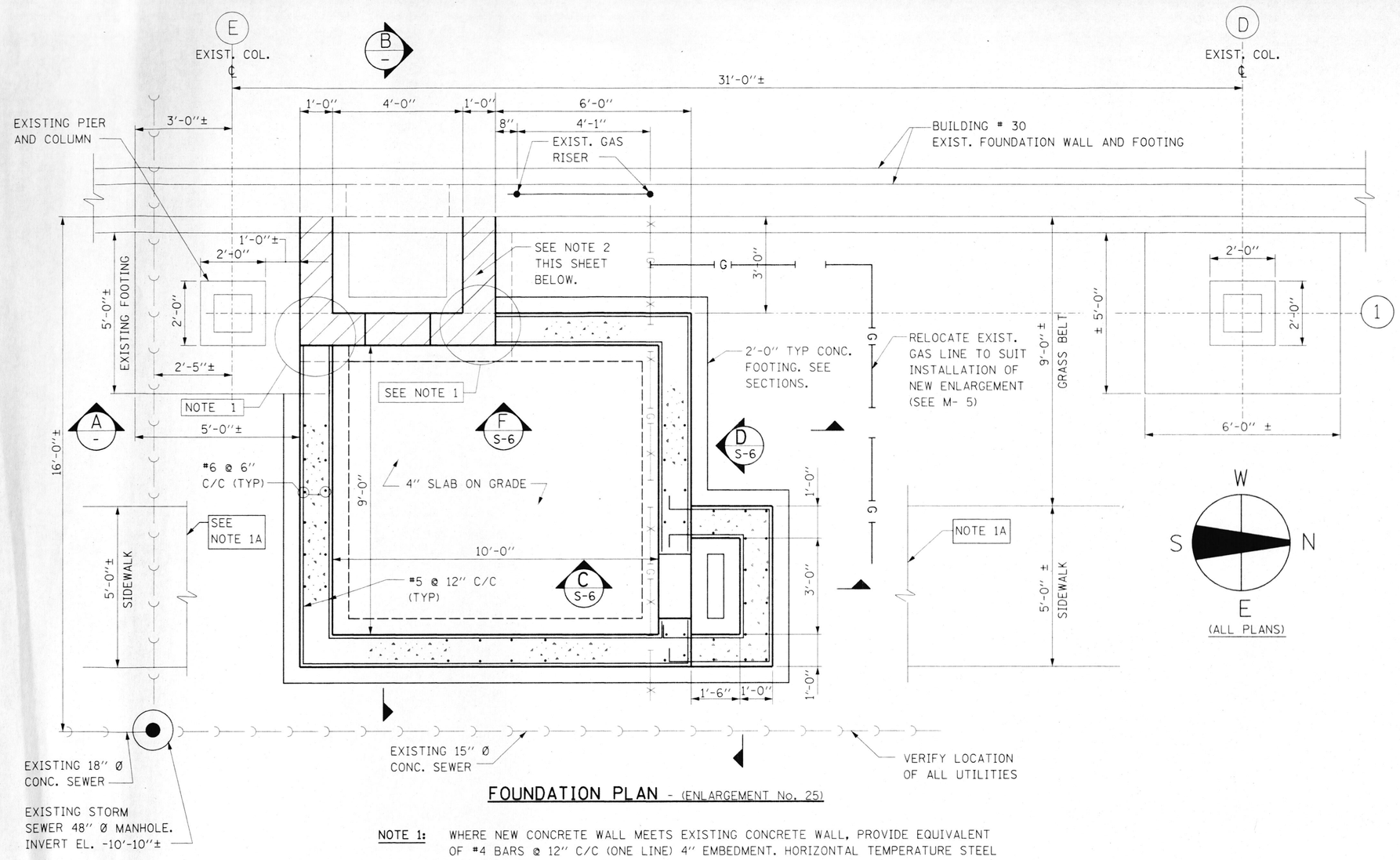

FOUNDATION PLAN - (ENLARGEMENT No. 25)

NOTE 1: WHERE NEW CONCRETE WALL MEETS EXISTING CONCRETE WALL, PROVIDE EQUIVALENT OF #4 BARS @ 12" C/C (ONE LINE) 4" EMBEDMENT. HORIZONTAL TEMPERATURE STEEL MAY BE INSERTED INTO EXISTING WALL TO SERVE AS DOWELS. FULLY GROUT STEEL IN EXISTING WALLS.

NOTE 1A: REMOVE AND REPLACE CONC. SIDEWALK AS NECESSARY FOR EXCAVATION

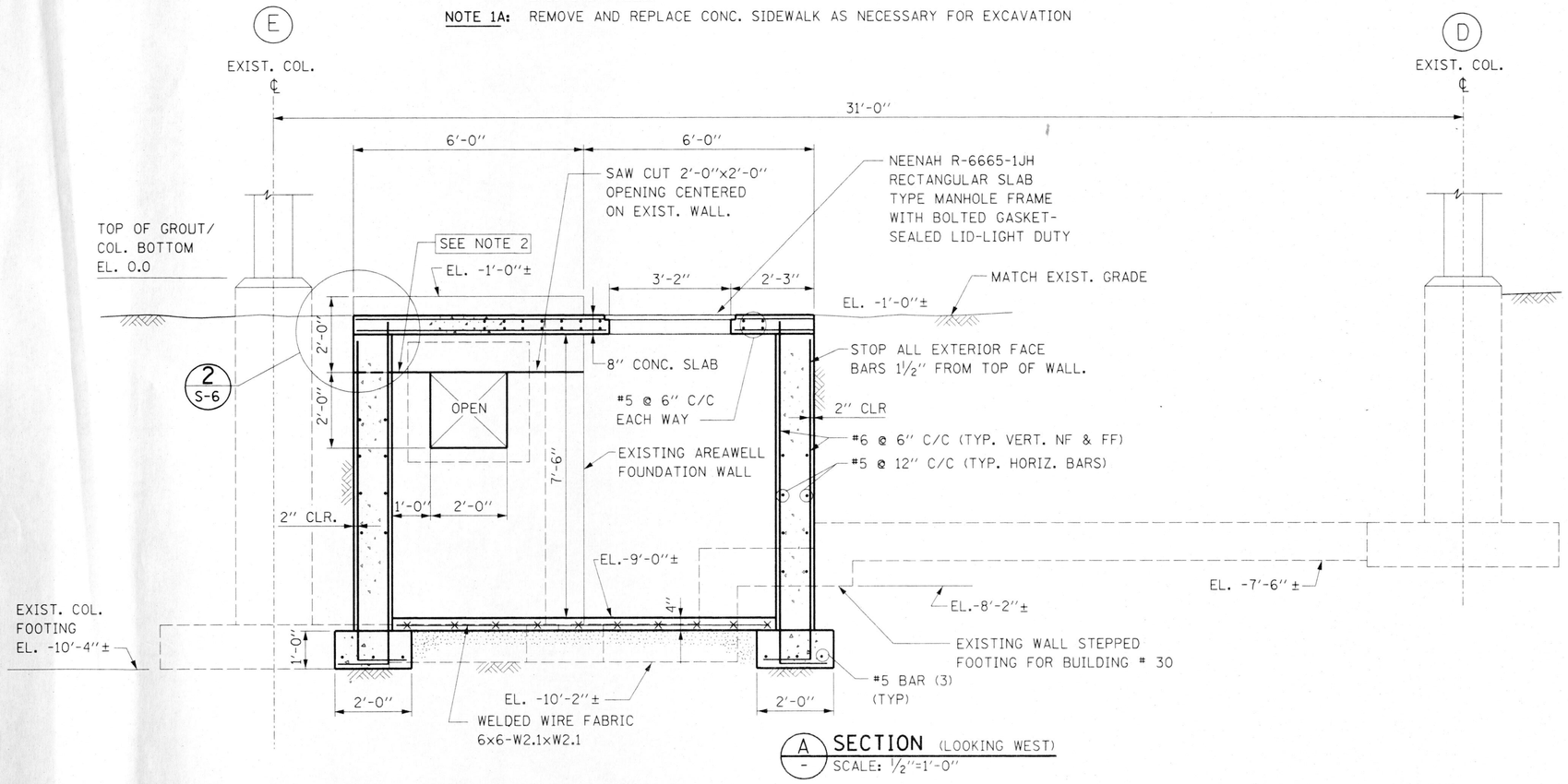

A - SECTION (LOOKING WEST)
SCALE: ½"=1'-0"

NOTE 2: REMOVE & REPLACE TOP 2'-0" OF EXIST. AREA WELL WALLS (3-SIDES) TO FACILITATE 2'-0"x2'-0" SAW CUT. PROVIDE #4 FULLY GROUTED DOWELS @ 8" C/C AND TYPICAL REBAR SPACING.

NOTE 3: DIMENSIONS & EXISTING ELEVATIONS OF EXISTING UNDERGROUND STRUCTURES ARE BASED ON ORIGINAL CONTRACT DRAWINGS. ACTUAL FOOTING ELEVATIONS AND DIMENSIONS MUST BE V.I.F. PLEASE, CONTACT THE ENGINEER OF RECORD IF DISCREPANCY EXISTS.

NOTE 4: NO EXCAVATION IS PERMITTED BELOW EXISTING FIELD VERIFIED FOOTING ELEVATIONS.

CONTRACTOR IS RESPONSIBLE FOR LOCATING ALL UTILITIES IN THE AREAS OF EXCAVATION PRIOR TO AND DURING CONSTRUCTION.

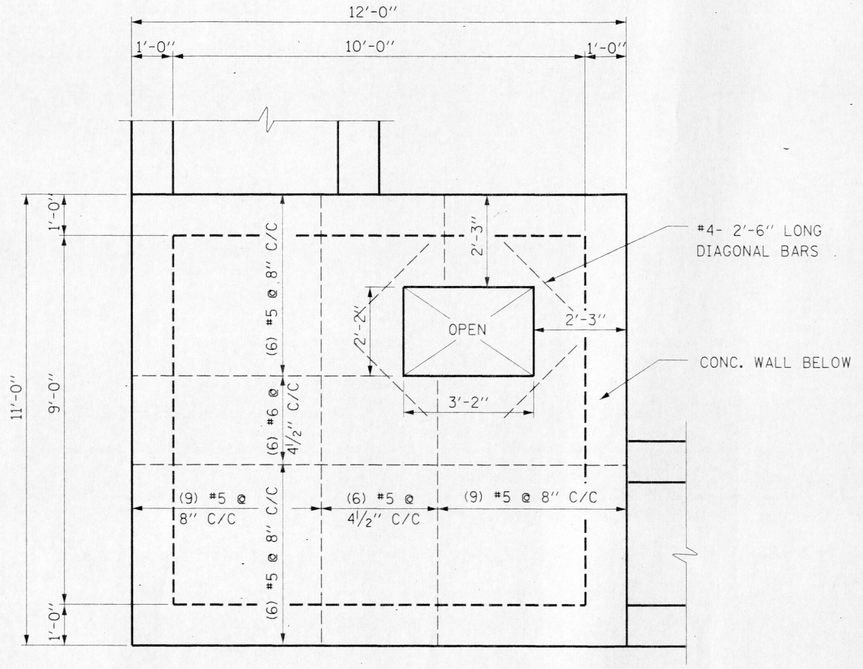

STRUCTURAL SLAB FRAMING PLAN
SCALE: ½"=1'-0"

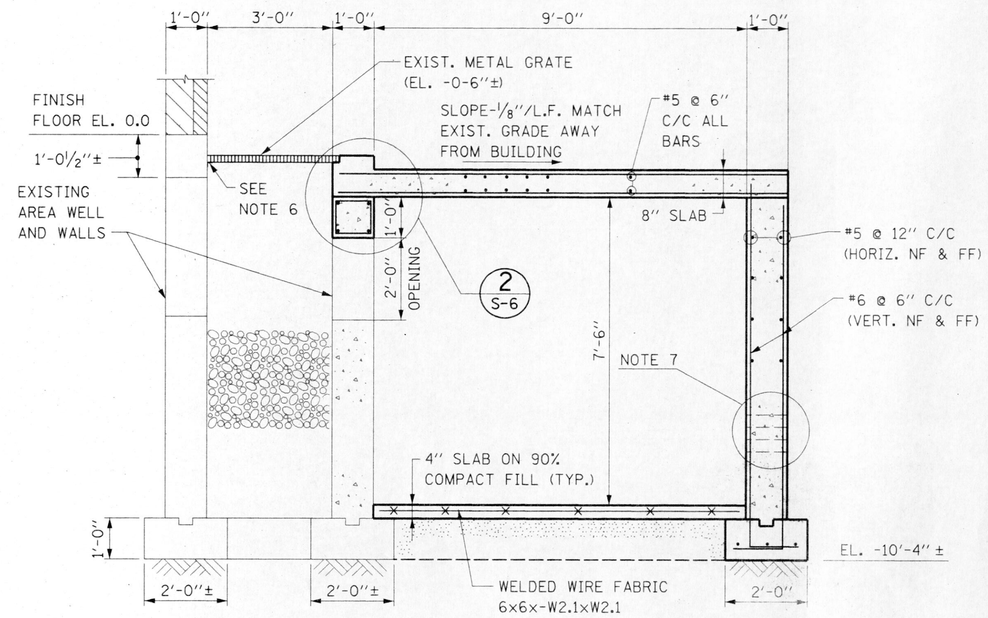

B - SECTION (LOOKING NORTH)
SCALE: ½"=1'-0"

NOTE 6: REUSE EXIST. GRATING CLIP IF POSSIBLE. REPLACE IF FOUND NECESSARY IN FIELD.

NOTE 7: PROVIDE THROUGH SLEEVES IN CONCRETE AS REQUIRED. PROVIDE DIAGONAL BARS AROUND SLEEVES, ALL SIDES, I.F & O.F. CONFIRM SLEEVE SIZE, ORIENTATION, AND ADDITIONAL REINF. PLACEMENT BEFORE PROCEEDING WITH CONSTRUCTION.

AS BUILT

DATE: FEBRUARY 3, 2003

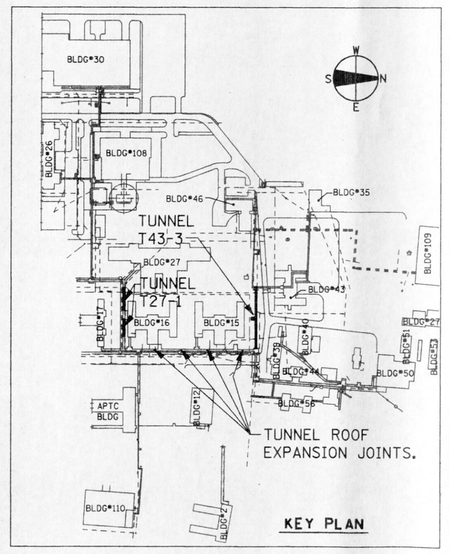

DAVID W. [illegible] STRUCTURAL

EXPIRATION DATE: 11-30-04

DATE 2-7-03

REVISIONS			DRAWN	PREPARED	SEAL
NO.	DATE	REMARKS	M.A.K.	J.A.B.	
			TRACED	APPROVED	
			CHECKED	APPROVED	
			R.P.M./J.A.B.	R.P.M.	

STV Incorporated
engineers/architects/planners/scientists/construction managers
70 W. MADISON ST. SUITE 2840 CHICAGO, IL 60602

CAPITAL DEVELOPMENT BOARD

State of Illinois
George H. Ryan, Governor

TUNNEL AND STEAM PIPING RENOVATIONS
PHASE 2, BUILDING #30
ENLARGEMENT PLAN & SECTIONS

ELGIN MENTAL HEALTH CENTER
750 SOUTH STATE STREET
ELGIN, ILLINOIS 60123

CDB PROJECT NO: 321-055-097 PH-2
DATE: FEBRUARY 3, 2003
SHEET NO: S-5
OF SHEETS

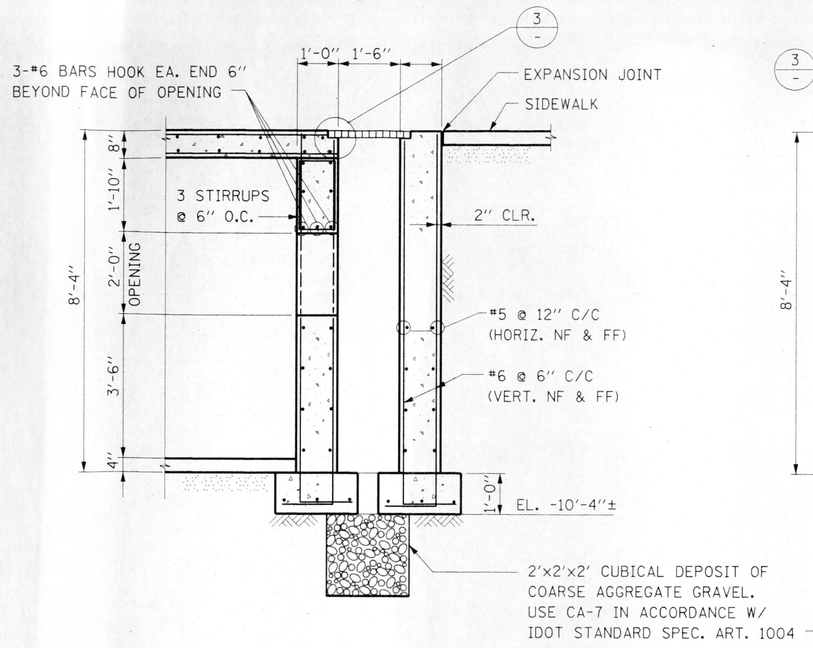

C S-5 **SECTION**
SCALE: 1/2"=1'-0"
(LOOKING WEST)

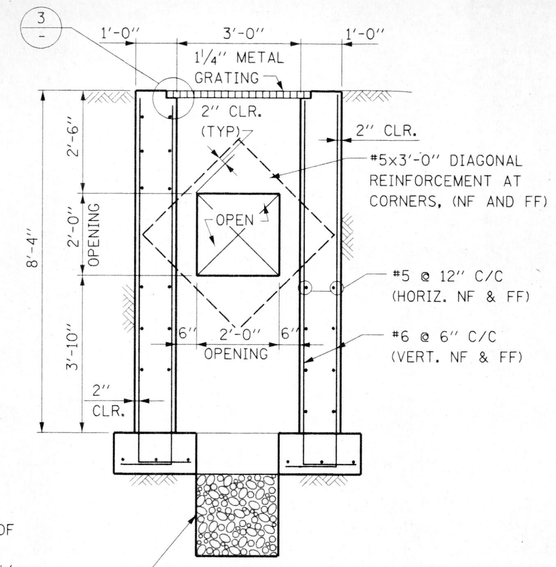

D S-5 **SECTION**
SCALE: 1/2"=1'-0"
(LOOKING NORTH)

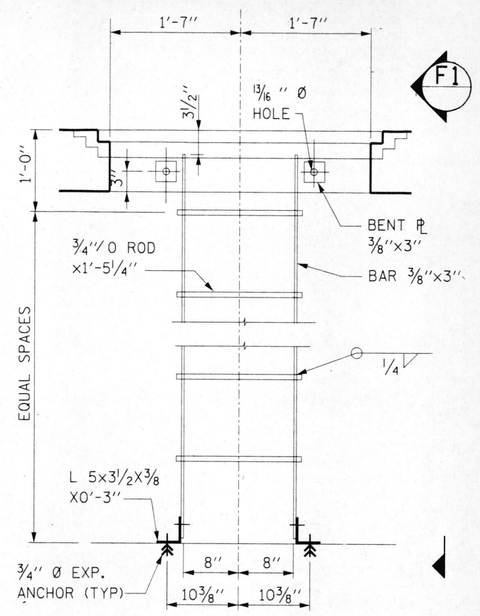

F S-5 **SECTION**
SCALE: 1"=1'-0"

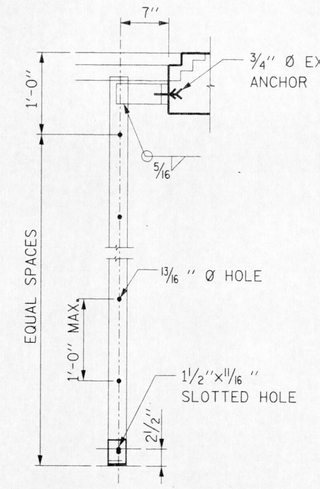

F1 - **ELEVATION**
SCALE: 1"=1'-0"

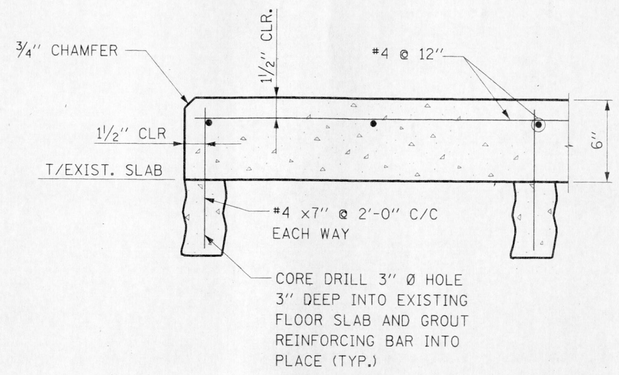

TYPICAL MAINTENANCE PAD
(FOR LOCATIONS SEE MECHANICAL SHEETS)

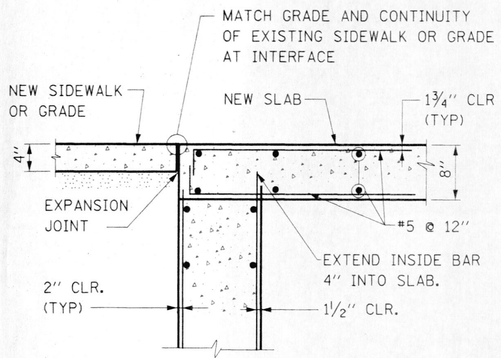

1 S-5 **DETAIL**
SCALE: 1"=1'-0"

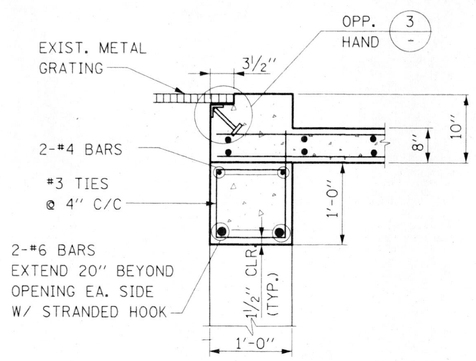

2 S-5 **DETAIL**
SCALE: 1"=1'-0"

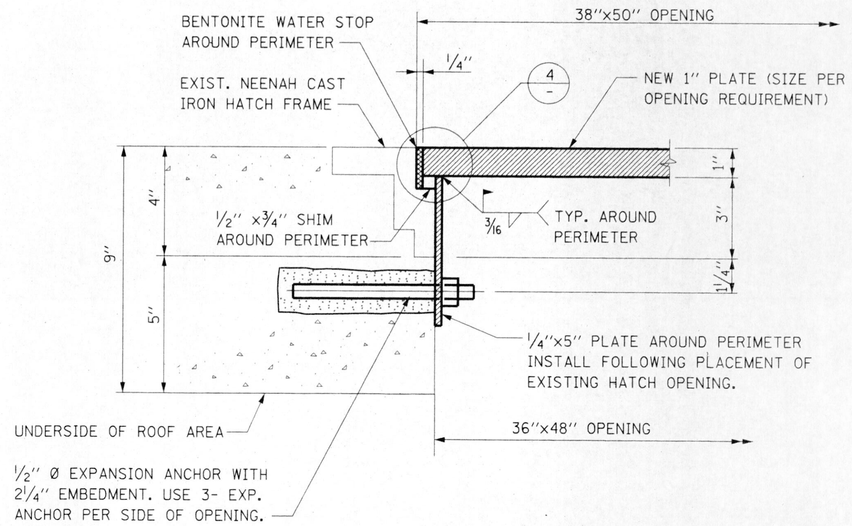

SECTION
(THRU 7 EXISTING HATCH COVER OPENINGS)

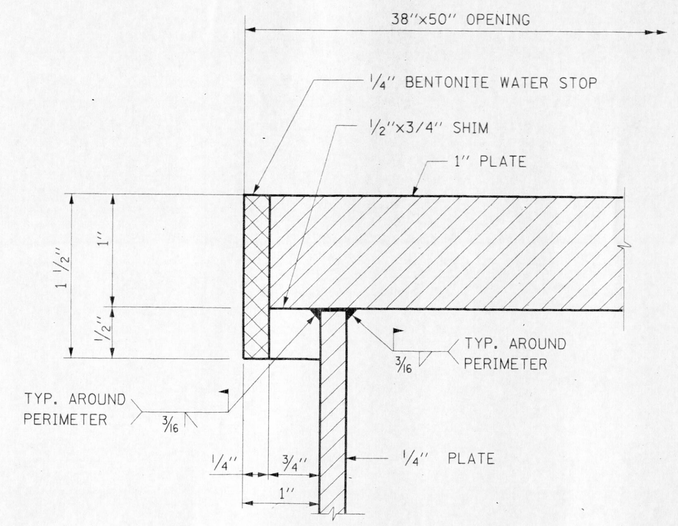

4 - **DETAIL**
SCALE: NONE

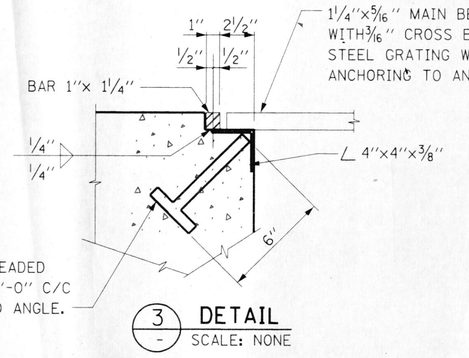

3 - **DETAIL**
SCALE: NONE

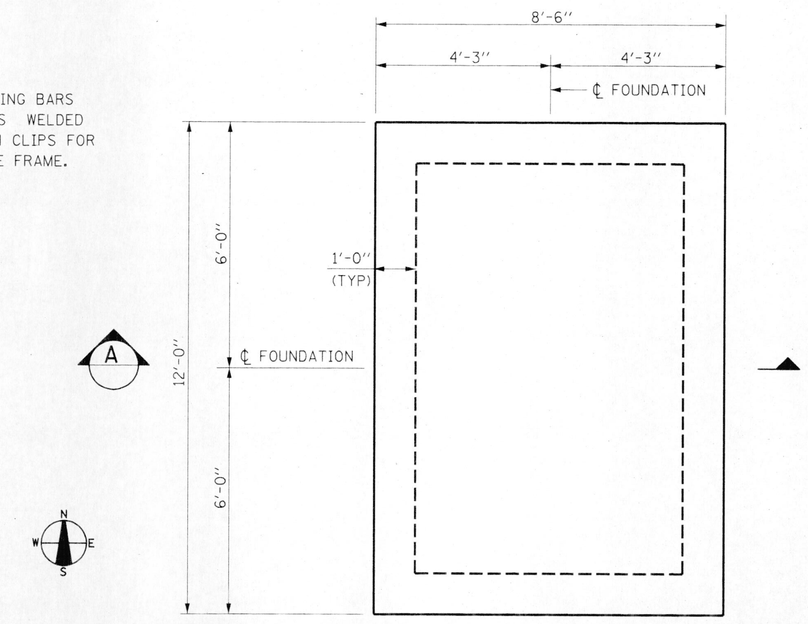

FOUNDATION PLAN - AIR COOLED CHILLER UNIT
(SEE SHEET M-37 FOR LOCATION)

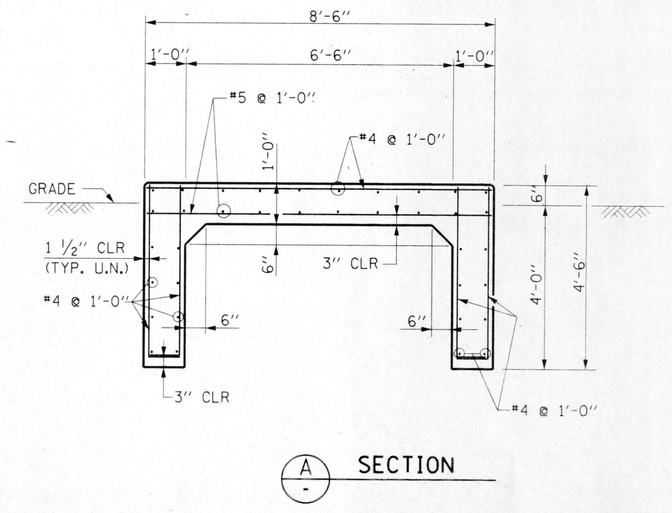

A - **SECTION**

AS BUILT
DATE: FEBRUARY 3, 2003

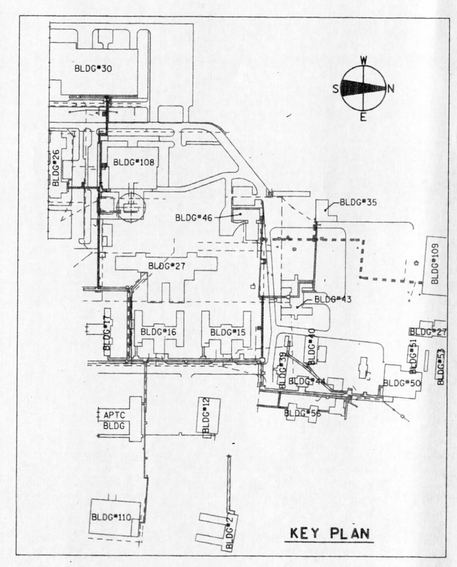

REVISIONS			DRAWN	PREPARED	SEAL
NO.	DATE	REMARKS	M.A.K.	R.P.M.	
			TRACED	APPROVED	
			CHECKED	APPROVED	
			J.A.B./R.P.M.	D.B.Z.	

STV Incorporated
engineers/architects/planners/scientists/construction managers
70 W. MADISON ST. SUITE 2840 CHICAGO, IL 60602

CAPITAL DEVELOPMENT BOARD

State of Illinois
George H. Ryan, Governor

TUNNEL AND STEAM PIPING RENOVATIONS
ENLARGEMENT SECTIONS AND DETAILS

ELGIN MENTAL HEALTH CENTER
750 SOUTH STATE STREET
ELGIN, ILLINOIS 60123

CDB PROJECT NO: 321-055-097 PH-2
DATE: FEBRUARY 3, 2003
SHEET NO: S-6
OF SHEETS